TECHNICAL DATA

STANDARD RESPONSE DRY UPRIGHT SPRINKLERS

The Viking Corporation, 210 N Industrial Park Drive, Hastings MI 49058
Telephone: 269-945-9501 Technical Services: 877-384-5464 Fax: 269-818-1680 Email: techsvcs@vikingcorp.com

1. DESCRIPTION

Viking Standard Response Dry Upright Sprinklers are thermosensitive spray sprinklers suitable for use in areas subject to freezing. The sprinklers are designed for dry systems and preaction systems where it is necessary to prevent water or condensation from entering the supply nipple before sprinkler operation. They are also suitable for use in unheated spaces above ceilings of heated rooms equipped with wet sprinkler systems.

These sprinklers are available in various finishes and temperature ratings to meet design requirements. The special Polyester coating has been investigated for installation in corrosive atmospheres and is cULus listed as corrosion resistant as indicated in Approval Chart 1.

NOTE: When installed in some corrosive environments, the Polyester finish may change color. This natural discoloration over time is not in itself an indication of corrosion and should not be treated as such. All sprinklers installed in corrosive environments should be replaced or tested as described in NFPA 25 on a more frequent basis.

2. LISTINGS AND APPROVALS

c UL us **cULus Listed:** Category VNIV

NYC Approved: MEA 89-92-E, Volume 15

Refer to Approval Chart 1 and Design Criteria on page 101l for cULus Listing requirements that must be followed.

3. TECHNICAL DATA

Specifications:

Available since 1992.
Minimum Operating Pressure: 7 psi (0.5 bar)
Maximum Working Pressure: 175 psi (12 bar). Factory tested pneumatically to 100 psi (6.89 bar)
Thread size: 1” NPT or 25 mm BSP
Nominal K-Factor: 5.6 U.S. (80.6 metric*) for all listed and approved lengths.

* Metric K-factor measurement shown is when pressure is measured in Bar. When pressure is measured in kPa, divide the metric K-factor shown by 10.0.

Glass-bulb fluid temperature rated to -65 °F (-55 °C)

Material Standards:

Frame Casting: Brass UNS-C84400
Deflector: Brass UNS-C26000
Bulb: Glass, nominal 5 mm diameter
Belleville Spring Sealing Assembly: Nickel Alloy, coated on both sides with PTFE Tape
Compression Screw: Brass UNS-C36000
Pip Cap: Brass UNS-C31400 or UNS-C31600
Pip Cap Adapter: Brass UNS-C36000
Orifice: Copper UNS-C21000
Gasket: Buna-N
Tube: ERW Hydraulic Steel Tube
Inlet: UNS-C31600
Support (Internal): Brass UNS-C36000
Barrel: Steel Pipe UNS-G10260, Electrodeposited Epoxy Base finish
Barrel Threads: UNS-G10260

Viking Technical Data may be found on The Viking Corporation’s Web site at http://www.vikinggroupinc.com. The Web site may include a more recent edition of this Technical Data Page.

Ordering Information: (Also refer to the current Viking price list.)

Order Standard Response Dry Upright Sprinklers by first adding the appropriate suffix for the sprinkler finish, the appropriate suffix for the temperature rating, and then the suffix for the length (“B” dimension) to sprinkler base part number. Order in a specific length noted as the “B” dimension (see Figure 2). The “B” dimension is the distance from the face of the fitting (tee) to the top of the deflector.

These sprinklers are listed and approved in lengths from 4-1/2” to 48-1/2” (114.3 mm to 1,232 mm). Lengths between 48-1/2” and 61-1/2” (1,232 mm and 1,562 mm) are available, with no approvals, on a “made-to-order” basis. Contact the manufacturer for more information.

Finish Suffix: Brass = A , Chrome = F, and White Polyester = M-/W
Temperature Suffix: 155 °F (68 °C) = B, 175 °F (79 °C) = D, 200 °F (93 °C) = E, 286 °F (141 °C) = G

VIKING®

TECHNICAL DATA

STANDARD RESPONSE DRY UPRIGHT SPRINKLERS

The Viking Corporation, 210 N Industrial Park Drive, Hastings MI 49058
Telephone: 269-945-9501 Technical Services: 877-384-5464 Fax: 269-818-1680 Email: techsvcs@vikingcorp.com

For example, sprinkler VK160 with 1" NPT Threads, a Brass finish and a 155 °F (68 °C) temperature rating, and "B" length of 10" = Part No. 08050AB10.

Available Finishes And Temperature Ratings: Refer to Table 1.

Accessories: (Also refer to the "Sprinkler Accessories" section of the Viking data book.)

Sprinkler Wrench: Standard Wrench Part No. 07297W/B (available since 1991)

Sprinkler Guard: Chrome, with no listings or approvals, for installation on dry upright sprinklers manufactured after May 1994 only (Part No. 08954).

4. INSTALLATION

Refer to appropriate NFPA Installation Standards.

5. OPERATION

During fire conditions, the heat-sensitive liquid in the glass bulb expands, causing the glass to shatter, releasing the internal parts to open the waterway. Water flowing through the sprinkler orifice strikes the sprinkler deflector, forming a uniform spray pattern to extinguish or control the fire.

6. INSPECTIONS, TESTS AND MAINTENANCE

Refer to NFPA 25 for Inspection, Testing and Maintenance requirements.

7. AVAILABILITY

The Viking Standard Response Dry Upright Sprinkler is available through a network of domestic and international distributors. See The Viking Corporation web site for the closest distributor or contact The Viking Corporation.

8. GUARANTEE

For details of warranty, refer to Viking's current list price schedule or contact Viking directly.

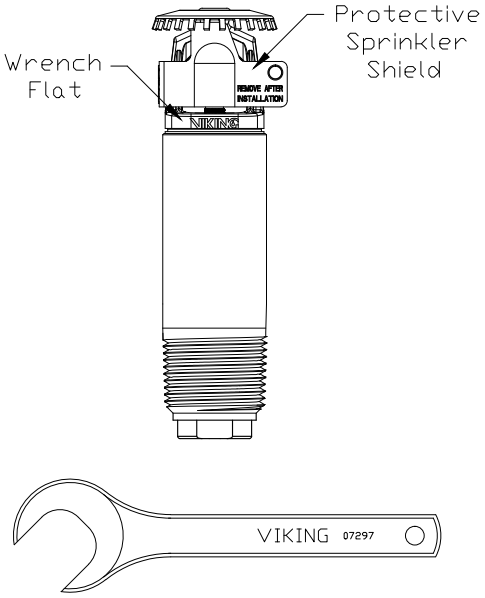

Figure 1: Standard Sprinkler Wrench 07297W/B

TABLE 1: AVAILABLE SPRINKLER TEMPERATURE RATINGS AND FINISHES

Sprinkler Temperature Classification	Sprinkler Nominal Temperature Rating[1]	Maximum Ambient Ceiling Temperature[2]	Bulb Color
Ordinary	155 °F (68 °C)	100 °F (38 °C)	Red
Intermediate	175 °F (79 °C)	150 °F (65 °C)	Yellow
Intermediate	200 °F (93 °C)	150 °F (65 °C)	Green
High	286 °F (141 °C)	225 °F (107 °C)	Blue

Sprinkler Finishes: Brass, Chrome, and White Polyester
Corrosion-Resistant Coating[3,4]: White Polyester in all temperature ratings

Footnotes

[1] The sprinkler temperature rating is stamped on the deflector.
[2] Based on NFPA-13. Other limits may apply, depending on fire loading, sprinkler location, and other requirements of the Authority Having Jurisdiction. Refer to specific installation standards.
[3] **The corrosion-resistant Polyester coating has passed the standard corrosion test required by the approving agencies indicated on page 101l. These tests cannot and do not represent all possible corrosive environments. Note: This coating is NOT corrosion proof. Prior to installation, verify through the end-user that the coating is compatible with or suitable for the proposed environment. Polyester coating is applied to the exposed exterior surfaces only. Note that the spring is exposed on sprinklers with Polyester coatings.**
[4] **When installed in some corrosive environments, the Polyester finish may change color. This natural discoloration over time is not in itself an indication of corrosion and should not be treated as such. All sprinklers installed in corrosive environments should be replaced or tested as described in NFPA 25 on a more frequent basis.**

TECHNICAL DATA

STANDARD RESPONSE DRY UPRIGHT SPRINKLERS

The Viking Corporation, 210 N Industrial Park Drive, Hastings MI 49058
Telephone: 269-945-9501 Technical Services: 877-384-5464 Fax: 269-818-1680 Email: techsvcs@vikingcorp.com

Approval Chart

Standard Response Dry Upright Sprinklers
Maximum 175 PSI (12 bar) WWP

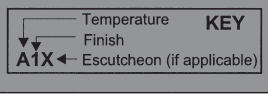

Sprinkler Base Part Number[1]	SIN	Style	Thread Size		Nominal K-Factor[2]		Order Length Increment		Listings[4] (Refer also to Design Criteria below.)						
			NPT	BSP	U.S.	metric[3]	Inches	mm	cULus[5]	FM	NYC[6]	VdS	LPCB	CE	
08050	VK160	Plain Barrel	1”	--	5.6	80.6	1/2”	12.7	A1	--	A2	--	--	--	--
08079	VK160		--	25 mm	5.6	80.6	1/2”	12.7	A1	--	A2	--	--	--	--

Approved Temperature Ratings
A - 155 °F (68 °C), 175 °F (79°C), 200 °F (93 °C), and 286 °F (141 °C)

Approved Finishes and “B” Dimensions
1 - Brass or White Polyester[7] with “B” dimension 4-1/2” to 48-1/2” (114.3 mm to 1,232 mm)
2 - Brass with “B” dimension 4-1/2” to 48-1/2” (114.3 mm to 1,232 mm)

Footnotes

[1] Part number shown is the base part number. For complete part number, refer to current Viking price list schedule.

[2] K-Factor applies for standard lengths (“B” Dimension indicated above).

[3] Metric K-factor measurement shown is when pressure is measured in Bar. When pressure is measured in kPa, divide the metric K-factor shown by 10.0.

[4] This chart shows the listings and approvals available at the time of printing. Other approvals may be in process. Check with the manufacturer for any additional approvals.

[5] Listed by Underwriter’s Laboratories for use in the U.S. and Canada.

[6] Accepted for use, City of New York Department of Buildings, MEA 89-92-E, Vol. 15.

[7] cULus Listed as corrosion resistant.

DESIGN CRITERIA - UL

(Also refer to the Approval Chart above.)

NOTE: When using CPVC fittings with Viking dry sprinklers, use only new Nibco Model 5012-S-Bl tees. When selecting other CPVC fittings, contact Viking Technical Services.

cULus Listing Requirements:

Standard Dry Upright Sprinklers are cULus Listed as indicated in the Approval Chart for installation in accordance with the latest edition of NFPA 13 for standard spray sprinklers.

- Designed for use in Light, Ordinary, and Extra Hazard occupancies.
- Protection areas and maximum spacing shall be in accordance with the tables provided in NFPA 13.
- Minimum spacing allowed is 6 ft. (1.8 m) unless baffles are installed in accordance with NFPA 13.
- Locate no less than 4” (102 mm) from walls.
- Maximum distance from walls shall be no more than one-half of the allowable distance between sprinklers. The distance shall be measured perpendicular to the wall.
- The sprinkler installation and obstruction rules contained in NFPA 13 for standard spray upright sprinklers must be followed.

IMPORTANT: Always refer to Bulletin Form No. F_091699 - Care and Handling of Sprinklers. Also refer to page DRY1-3 for general care, installation, and maintenance information. Viking sprinklers are to be installed in accordance with the latest edition of Viking technical data, the appropriate standards of NFPA, LPCB, APSAD, VdS or other similar organizations, and also with the provisions of governmental codes, ordinances, and standards, whenever applicable.

TECHNICAL DATA

STANDARD RESPONSE DRY UPRIGHT SPRINKLERS

The Viking Corporation, 210 N Industrial Park Drive, Hastings MI 49058
Telephone: 269-945-9501 Technical Services: 877-384-5464 Fax: 269-818-1680 Email: techsvcs@vikingcorp.com

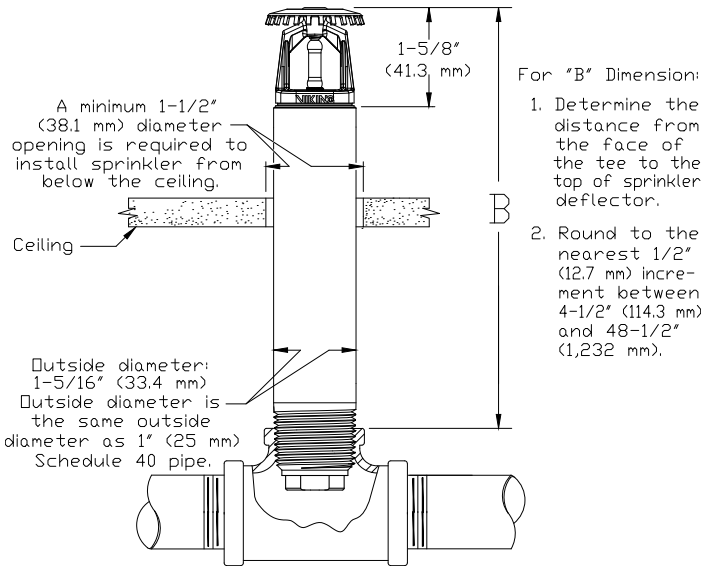

Figure 2: **Standard Response Dry Upright Sprinkler**

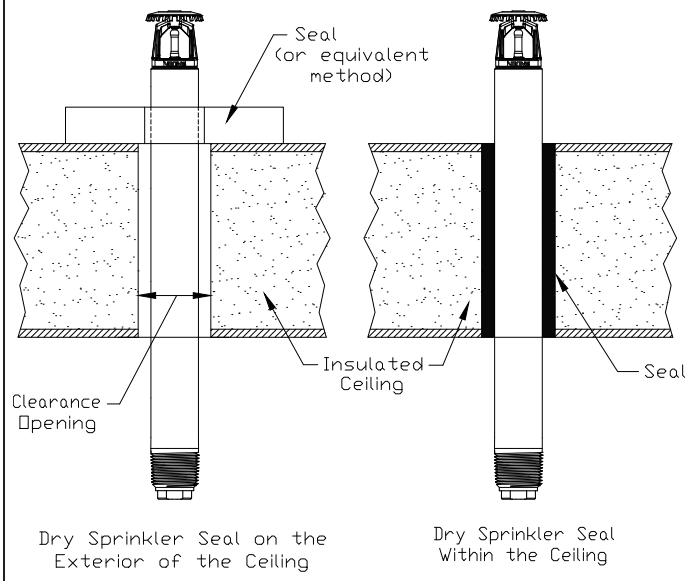

Figure 3: **Dry Sprinkler Seal**

Ambient Temperature of Protected Area* at the Discharge End of the Sprinkler	Exposed Barrel Ambient Temperature 40°F/4°C	50°F/10°C	60°F/16°C
	Exposed Minimum Barrel Length** Face of Tee to Surface of Ceiling In. (mm)	In. (mm)	In. (mm)
40°F (4°C)	0	0	0
30°F (-1°C)	0	0	0
20°F (-7°C)	4 (100)	0	0
10°F (-12°C)	8 (203)	1 (25.4)	0
0°F (-18°C)	12 (305)	3 (76)	0
-10°F (-23°C)	14 (356)	4 (102)	1 (25.4)
-20°F (-29°C)	14 (356)	6 (152)	3 (76)
-30°F (-34°C)	16 (406)	8 (203)	4 (102)
-40°F (-40°C)	18 (457)	8 (203)	4 (102)
-50°F (-46°C)	20 (508)	10 (254)	6 (152)
-60°F (-51°C)	20 (508)	10 (254)	6 (152)

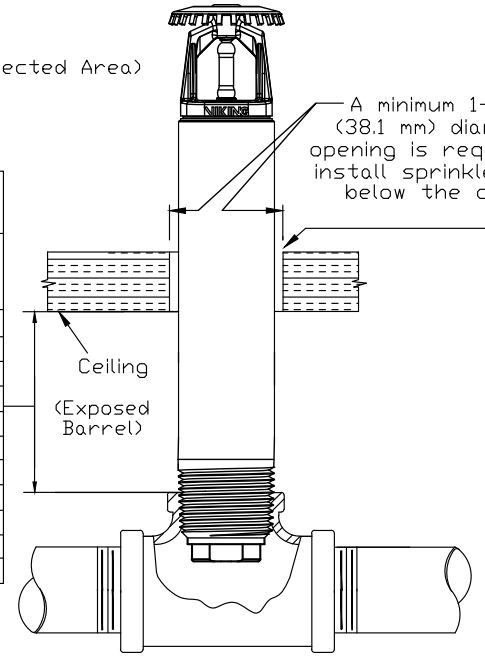

*The protected area refers to the area above the ceiling.
The ambient temperature is the temperature at the discharge end of the sprinkler.
For protected area temperatures that occur between the values listed, use the next cooler temperature.
**The minimum required barrel length is not the same as the "B" dimension. Refer to Figure 2 for the "B" Dimension.
NOTE: Exposed minimum barrel lengths are inclusive up to 30 mph wind velocities.

Figure 4: **Dry Upright Sprinkler Required Minimum Barrel Length Based on Ambient Temperature in the Protected Area**