Section E
Special Sprinklers

TABLE OF CONTENTS

Institutional – VK426/VK427, VK650/VK651 5.6 (81) K factor, flush pendent/flush horizontal sidewall ...E-1
Model V-BB specific application attic sprinkler - VK684, VK685, VK686, VK681, VK682, VK683 .....E-2
Model V-SD specific application attic sprinkler - VK693, VK694, VK695 .....E-2
Attic upright specific application sprinkler – VK696, VK697.....E-2
Model V-HIP specific application attic sprinkler – VK660 .....E-2
Model V-EP specific application attic sprinkler – VK690 .....E-2
Combustible Interstitial Space - VK900, VK950, COIN®, upright E-3
Window Sprinklers – VK960, VK962 pendent vertical sidewall and horizontal sidewall.....E-3
Cleanroom Sprinklers – VK850, VK851 pendent.....E-4
Window Sprinklers – VK852, VK853 pendent.....E-4

Notes

1. Unless otherwise indicated, all cover plates and escutcheons are sold separately.
2. Cover plates, escutcheons, and sprinklers are available in custom colors at an additional charge. See page F-8 for details.
3. Refer to Viking technical data pages for complete product specifications. You may print or download technical data by visiting www.vikinggroupinc.com.
4. List prices effective May 10, 2025. Supersedes July 2022 list price book.
5. All sales by Viking are subject to the Terms & Conditions found on the last page of this book.

COIN® is a registered trademark of The Viking Corporation
Micromatic® is a registered trademark of The Viking Corporation

Model VXD Preaction Systems

Viking Model VXD Pretrimmed Risers (PTR)

Deluge with Electric Release *IPG V404*

1-1/2"	2"	2-1/2"	3"	4"	6"	8"
24883	24893	25464	25396	25411	25437	25497
$12,034.06	$13,438.96	$15,578.62	$15,578.62	$16,630.57	$20,228.85	$34,272.85

Single Interlock Preaction with Electric Release *IPG V405*

1-1/2"	2"	2-1/2"	3"	4"	6"	8"
24887	24897	25466	25398	25413	25439	25499
$12,845.77	$13,561.92	$16,038.37	$16,038.37	$19,404.71	$22,440.25	$35,674.86

Double Interlock with Electric/Pneumatic Release *IPG V405*

1-1/2"	2"	2-1/2"	3"	4"	6"	8"
24891	24901	25468	25400	25415	25441	25501
$13,657.27	$14,889.28	$16,902.02	$16,902.02	$21,164.80	$23,544.79	$37,319.74

Double Interlock with Electric/Pneu-Lectric Release *IPG V405*

1-1/2"	2"	2-1/2"	3"	4"	6"	8"
24887	24897	25466	25398	25413	25439	25499
$12,845.77	$13,561.92	$16,038.37	$16,038.37	$19,404.71	$22,440.25	$35,674.86

VXD Preaction Valves - Pretrimmed Deluge Valves

Pre-trimmed Electric Release Preaction Galvanized *IPG V403*

1-1/2"	2"	2-1/2"	3"	4"	6"	8"	10"
23563	23584	23605	23626	23647	23669	23690	23751
$11,428.28	$11,993.24	$13,432.00	$13,619.29	$14,580.74	$17,477.60	$31,023.18	$38,114.97

Pre-trimmed Pneumatic Release Preaction Galvanized *IPG V403*

1-1/2"	2"	2-1/2"	3"	4"	6"	8"	10"
23566	23587	23608	23629	23651	23672	23693	23754
$11,428.28	$11,993.25	$13,432.00	$13,619.29	$14,580.74	$17,477.60	$31,023.19	$38,114.96

Pre-trimmed Electric/Pneumatic Release Preaction Galvanized *IPG V403*

1-1/2"	2"	2-1/2"	3"	4"	6"	8"	10"
23569	23590	23611	23632	23654	23675	23696	23757
$12,460.64	$13,025.61	$14,464.36	$14,651.66	$15,613.10	$18,509.97	$32,055.55	$39,147.33

Model VXD Preaction Systems

VXD Preaction Valves - Pretrimmed Deluge Valves

Pre-trimmed Electric Release Preaction Galvanized *IPG V403*

1-1/2"	2"	2-1/2"	3"	4"	6"	8"	10"
23563	23584	23605	23626	23647	23669	23690	23751
$11,428.28	$11,993.24	$13,432.00	$13,619.29	$14,580.74	$17,477.60	$31,023.18	$38,114.97

Pre-trimmed Pneumatic Release Preaction Galvanized *IPG V403*

1-1/2"	2"	2-1/2"	3"	4"	6"	8"	10"
23566	23587	23608	23629	23651	23672	23693	23754
$11,428.28	$11,993.25	$13,432.00	$13,619.29	$14,580.74	$17,477.60	$31,023.19	$38,114.96

Pre-trimmed Electric/Pneumatic Release Preaction Galvanized *IPG V403*

1-1/2"	2"	2-1/2"	3"	4"	6"	8"	10"
23569	23590	23611	23632	23654	23675	23696	23757
$12,460.64	$13,025.61	$14,464.36	$14,651.66	$15,613.10	$18,509.97	$32,055.55	$39,147.33

VXD Preaction Systems - Loose Valve and Trim

Model VXD Deluge Valve - Groove/Groove *IPG V400*

1-1/2"	2"	2-1/2"	3"	4"	6"	8"	10"
23310	23311	23312	23313	23316	23319	23322	23325
$3,742.33	$4,219.80	$5,853.65	$6,070.15	$7,066.71	$9,286.21	$21,493.88	$27,844.71

Model VXD Deluge Valve - Flange/Flange *IPG V400*

3"	4"	6"	8"	10"
23314	23317	23320	23323	23326
$6,070.15	$7,066.71	$9,286.21	$21,493.88	$27,844.71

Loose Trim Electric Release Preaction Galvanized *IPG V401*

1-1/2"	2"	2-1/2"	3"	4"	6"	8"	10"
23562-1	23583-1	23604-1	23625-1	23646-1	23668-1	23689-1	23750-1
$5,827.37	$5,827.37	$5,837.52	$5,837.52	$5,933.73	$5,940.92	$7,982.44	$8,477.66

Loose Trim Pneumatic Release Preaction Galvanized *IPG V401*

1-1/2"	2"	2-1/2"	3"	4"	6"	8"	10"
23565-1	23586-1	23607-1	23628-1	23650-1	23671-1	23692-1	23753-1
$5,827.37	$5,827.37	$5,837.52	$5,837.52	$5,933.73	$5,940.93	$7,982.44	$8,477.66

Loose Trim Electric/Pneumatic Release Preaction Galvanized *IPG V401*

1-1/2"	2"	2-1/2"	3"	4"	6"	8"	10"
23568-1	23589-1	23610-1	23631-1	23653-1	23674-1	23695-1	23756-1
$6,612.99	$6,612.99	$6,722.65	$6,722.65	$6,929.13	$6,963.86	$8,768.08	$9,878.36

Riser Check Valve and Trim *IPG V259/V220*

1-1/2"	2"	2-1/2"	3"	4"	6"	8"	10"
11054	11059	07929	08507	08510	08513	08516	23788
$1,120.04	$1,294.97	$1,341.59	$1,341.59	$1,341.59	$2,482.72	$3,515.89	$5,105.10

Preaction System - Single Interlocked - Pneumatic Release

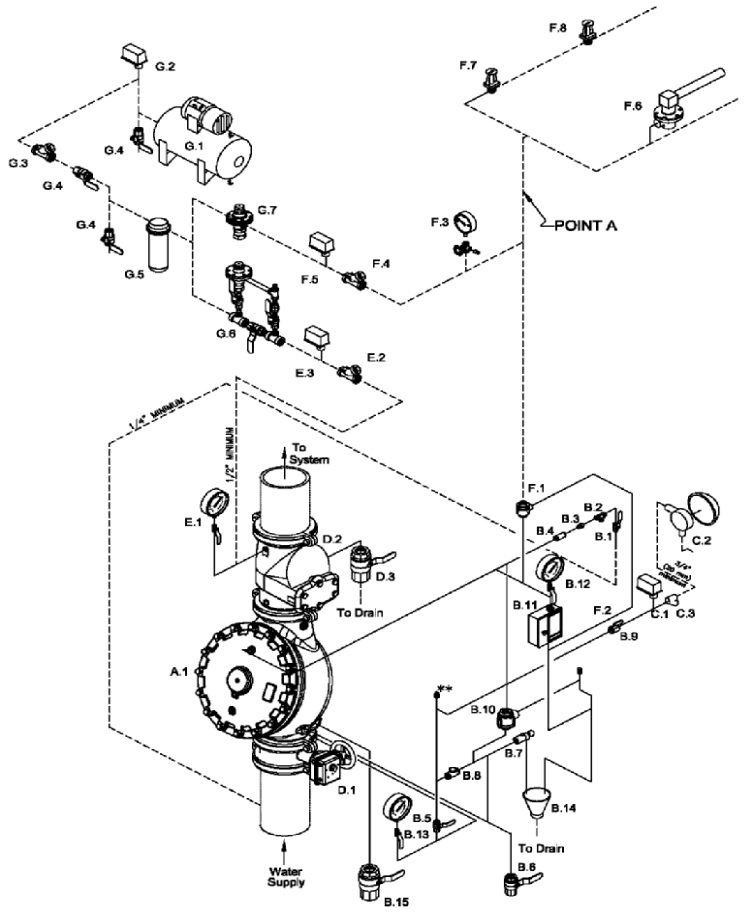

SYSTEM COMPONENTS

A. Valve
- A.1 Deluge Valve

B. Deluge Valve Conventional Trim *
- (See Deluge Valve Conventional Trim Charts)
- B.1 Priming Valve (Normally Open)
- B.2 Strainer
- B.3 1/16" Restricted Orifice
- B.4 Spring Loaded Check Valve
- B.5 Alarm Test Valve (Normally Closed)
- B.6 Auxiliary Drain Valve (Normally Closed)
- B.7 Drip Check Valve
- B.8 Drain Check Valve
- B.9 Alarm Shut-Off Valve (Normally Open)
- B.10 Pressure Operated Relief Valve (P.O.R.V.
- B.11 Emergency Release
- B.12 Priming Pressure Water Gauge and Valve
- B.13 Water Supply Pressure Gauge and Valve
- B.14 Drain Cup
- B.15 Flow Test Valve (Normally Closed)

C. Water Flow Alarm Equipment
- C.1 Alarm Pressure Switch and/or
- C.2 Water Motor Alarm (Strainer Required)
- C.3 Strainer

D. Riser
- D.1 Water Supply Control Valve
- D.2 Easy Riser Check Valve or rubber seated check valve
- D.3 Sprinkler System Main Drain

E. Supervisory Air Supply
- E.1 System Pressure Gauge and Valve
- E.2 Soft Seat Swing Check Valve
- E.3 Air Pressure Supervisory Switch

F. Release System
- F.1 Pneumatic Actuator
- F.2 Pneumatic Release Module Trim
- F.3 Air Pressure Gauge and Valve
- F.4 Soft Seat Check Valve
- F.5 Air Pressure Supervisory Switch
- F.6 Thermostatic Release and/or
- F.7 Fixed Temperature Release and/or
- F.8 Pilot Head (Sprinkler)

G. Air Supply
- G.1 Automatic Air Supply. Air Compressor and Tank shown for clarity.
- G.2 Air Supervisory Pressure Switch (Compressor On/Off Control Switch)
- G.3 Soft Seat Check Valve
- G.4 Shut Off Valve (Indicating Ball Valve recommended.)
- G.5 Dehydrator
- G.6 Air maintenance Device & By-Pass Trim
- G.7 Air maintenance Device

Components above are included in Quik Pik packages as customized by user.

Model F Deluge / Preaction Valve* - STRAIGHT THROUGH

V233	1-1/2"	2"	2-1/2"	3"	4"	6"	8"
Thread X Thread	12126 $4,781.59	12059 $4,942.18	12401 $6,526.22	N/A	N/A	N/A	N/A
Flange X Flange	N/A	N/A	N/A	12014 $6,526.22	11953 $8,501.01	11955 $11,627.84	11991 $26,338.47
Flange X Groove	N/A	N/A	N/A	12018 $6,526.22	11952 $8,501.01	11954 $11,627.84	N/A
Groove X Groove	12125 $4,781.59	12057 $4,942.18	12403 $6,526.22	12022 $6,526.22	11513 $8,501.01	11524 $11,627.84	11018 $26,338.47

** Valve is not included in trim packages. Please order separately. See following page for trim packages and equipment.*

Preaction System - Single Interlocked - Pneumatic Release

TrimPac® *V251*	**1-1/2"**	**2"**	**2-1/2"**	**3"**	**4"**	**6"**	**8"**
Straight-Through	13793B-4 $8,337.72	13793B-4 $8,337.72	13793B-4 $8,337.72	13793B-4 $8,337.72	13793B-4 $8,337.72	13793B-4 $8,337.72	13793B-4 $8,337.72

TrimPac® includes conventional trim, releasing device (pneumatic actuator), releasing trim, and flexible hose kit.
Drain package for TrimPac® must be ordered separately (see below).

Drain Package *(IPG V257)*

Use with TrimPac® *(order separately)*	11894-1 $876.54	11894-2 $709.00	11894-3 $803.47	11894-3 $803.47	11894-4 $1,031.22	11894-4 $1,031.22	11894-4 $1,031.22

	1-1/2"	**2"**	**2-1/2"**	**3"**	**4"**	**6"**	**8"**
Trim (Vertical - Straight Through Valve) - Galvanized *(IPG 236)*							
Loose Trim *(incl. accessory pkg-09316)*	14634-1 $5,329.24	14634-1 $5,329.24	14636-1 $5,215.35	14636-1 $5,215.35	14639-1 $5,457.32	14641-1 $5,470.13	14642-1 $7,923.71
Modular Trim *(incl. accessory pkg-09316)*	14634-1P $5,810.40	14634-1P $5,810.40	14636-1P $5,696.46	14636-1P $5,696.46	14639-1P $5,940.73	14641-1P $5,953.48	14642-1P $8,407.08

	1-1/2"	**2"**	**2-1/2"**	**3"**	**4"**	**6"**	**8"**
Releasing Devices *(IPG V226)*							
Pneumatic Actuator	06459B $1,029.29	06459B $1,029.29	06459B $1,029.29	06459B $1,029.29	06459B $1,029.29	06459B $1,029.29	06459B $1,029.29
Releasing Trim - Galvanized *(IPG V238)*							
Loose Trim *(releasing device not incl.)*	10809 $161.27	10809 $161.27	10809 $161.27	10809 $161.27	10809 $161.27	10809 $161.27	10809 $161.27
Modular Trim *(releasing device not incl.)*	10809P $718.70	10809P $718.70	10809P $718.70	10809P $718.70	10809P $718.70	10809P $718.70	10809P $718.70
Loose Trim-DOMESTIC[1] *(releasing device not incl.)*	10809USA $215.03	10809USA $215.03	10809USA $215.03	10809USA $215.03	10809USA $215.03	10809USA $215.03	10809USA $215.03

	1-1/2"	**2"**	**2-1/2"**	**3"**	**4"**	**6"**	**8"**
Riser Check Valve and Trim *(IPG V259 / V222)*							
Riser Check Valve Threaded	10659 $1,120.04	10667 $1,294.97	**N/A**	**N/A**	**N/A**	**N/A**	**N/A**
Riser Check Valve Flange / Flange	**N/A**	**N/A**	**N/A**	08505 $1,860.75	08508 $1,917.26	08511 $3,161.20	**N/A**
Riser Check Valve Flange / Groove	**N/A**	**N/A**	**N/A**	08506 $1,578.11	08509 $1,624.35	08512 $2,688.26	08515 $3,804.99
Riser Check Valve Groove / Groove	11054 $1,120.04	11059 $1,294.97	07929 $1,341.59	08507 $1,341.59	08510 $1,341.59	08513 $2,482.72	08516 $3,515.89
Riser Check Valve Trim *(For Preaction)*	12960 $378.80	12960 $378.80	13776 $948.97	13776 $948.97	13777 $1,003.14	13777 $1,003.14	13777 $1,003.14

Riser check valve trim includes system main drain valve and air pressure gauge.

Please contact your customer service center for price and availability of non-interlocked preaction systems.

Preaction System - Single Interlocked - Electric Release

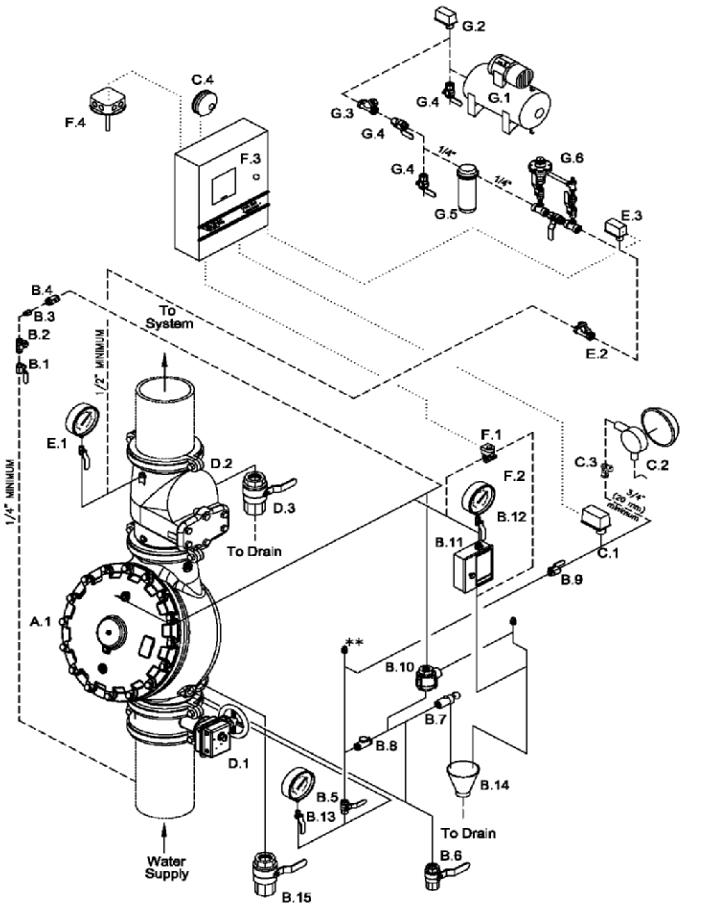

SYSTEM COMPONENTS

A. Valve
- A.1 Deluge Valve

B. Deluge Valve Conventional Trim *
- (See Deluge Valve Conventional Trim Charts)
- B.1 Priming Valve (Normally Open)
- B.2 Strainer
- B.3 1/16" Restricted Orifice
- B.4 Spring Loaded Check Valve
- B.5 Alarm Test Valve (Normally Closed)
- B.6 Auxiliary Drain Valve (Normally Closed)
- B.7 Drip Check Valve
- B.8 Drain Check Valve
- B.9 Alarm Shut-Off Valve (Normally Open)
- B.10 Pressure Operated Relief Valve (P.O.R.V.)
- B.11 Emergency Release
- B.12 Priming Pressure Water Gauge and Valve
- B.13 Water Supply Pressure Gauge and Valve
- B.14 Drain Cup
- B.15 Flow Test Valve (Normally Closed)

C. Water Flow Alarm Equipment
- C.1 Alarm Pressure Switch and/or
- C.2 Water Motor Alarm (Strainer Required)
- C.3 Strainer
- C.4 Electric Alarm Bell

D. Riser
- D.1 Water Supply Control Valve
- D.2 Easy Riser Check Valve or rubber seated check valve
- D.3 Sprinkler System Main Drain

E. Supervisory Air Supply
- E.1 System Pressure Gauge and Valve
- E.2 Soft Seat Swing Check Valve
- E.3 Air Pressure Supervisory Switch

F. Release System
- F.1 Solenoid Valve (Normally Closed)
- F.2 Electric Release Trim
- F.3 System Control Panel configured for Non-Interlocked Preaction operation.
- F.4 Electric Detection System. Heat Detector shown for clarity.

- G.1 Automatic Air Supply. Air Compressor and Tank shown for clarity.
- G.2 Air Supervisory Pressure Switch (Compressor On/Off Control Switch)
- G.3 Soft Seat Check Valve
- G.4 Shut Off Valve (Indicating Ball Valve recommended.)
- G.5 Dehydrator
- G.6 Air maintenance Device & By-Pass Trim
- G.7 1/"2 x 1/4" Reducing Coupling

----- Dashed lines indicate pipe required but not listed in "System Components" Table.

..... Dotted lines indicate electrical detection system wiring required but not listed in "System Components" Table. For additional wiring requirements refer to technical data for components used.

Components shown above are included in Quik Pik packages as customized by user. See page O-5.

Model F Deluge / Preaction Valve* - STRAIGHT THROUGH

V233	1-1/2"	2"	2-1/2"	3"	4"	6"	8"
Thread X Thread	12126 $4,781.59	12059 $4,942.18	12401 $6,526.22	N/A	N/A	N/A	N/A
Flange X Flange	N/A	N/A	N/A	12014 $6,526.22	11953 $8,501.01	11955 $11,627.84	11991 $26,338.47
Flange X Groove	N/A	N/A	N/A	12018 $6,526.22	11952 $8,501.01	11954 $11,627.84	N/A
Groove X Groove	12125 $4,781.59	12057 $4,942.18	12403 $6,526.22	12022 $6,526.22	11513 $8,501.01	11524 $11,627.84	11018 $26,338.47

See page O-19-20 for additional valve and trim options, including Halar® coated valves, horizontal trim, domestic trim, and brass trim packages.

** Valve is not included in trim packages. Please order separately. See following page for trim packages and equipment.*

Preaction System - Single Interlocked - Electric Release

TrimPac® *V234*	**1-1/2"**	**2"**	**2-1/2"**	**3"**	**4"**	**6"**	**8"**
Straight-Through	13792B-3 $8,490.86	13792B-3 $8,490.86	13792B-3 $8,490.86	13792B-3 $8,490.86	13792B-3 $8,490.86	13792B-3 $8,490.86	13792B-3 $8,490.86

TrimPac® includes conventional trim, releasing device (solenoid valve), releasing trim, and flexible hose kit.
Drain package for TrimPac® must be ordered separately (see below).

Drain Package *(IPG V257)*

Use with TrimPac® *(order separately)*	11894-1 $876.54	11894-2 $709.00	11894-3 $803.47	11894-3 $803.47	11894-4 $1,031.22	11894-4 $1,031.22	11894-4 $1,031.22

	1-1/2"	**2"**	**2-1/2"**	**3"**	**4"**	**6"**	**8"**
Trim (Vertical - Straight Through Valve) - Galvanized *(IPG V236)*							
Loose Trim *(incl. accessory pkg-09316)*	14634-1 $5,329.24	14634-1 $5,329.24	14636-1 $5,215.35	14636-1 $5,215.35	14639-1 $5,457.32	14641-1 $5,470.13	14642-1 $7,923.71
Modular Trim *(incl. accessory pkg-09316)*	14634-1P $5,810.40	14634-1P $5,810.40	14636-1P $5,696.46	14636-1P $5,696.46	14639-1P $5,940.73	14641-1P $5,953.48	14642-1P $8,407.08

	1-1/2"	**2"**	**2-1/2"**	**3"**	**4"**	**6"**	**8"**
Releasing Devices *(IPG V240)*							
Solenoid Valve	11601 $1,597.55	11601 $1,597.55	11601 $1,597.55	11601 $1,597.55	11601 $1,597.55	11601 $1,597.55	11601 $1,597.55
Releasing Trim - Galvanized *(IPG V238)*							
Loose Trim *(releasing device not incl.)*	10830 $166.50	10830 $166.50	10830 $166.50	10830 $166.50	10830 $166.50	10830 $166.50	10830 $166.50
Modular Trim *(releasing device not incl.)*	10830P $718.70	10830P $718.70	10830P $718.70	10830P $718.70	10830P $718.70	10830P $718.70	10830P $718.70
Loose Trim - DOMESTIC *(releasing device not incl.)*	10830USA $221.96	10830USA $221.96	10830USA $221.96	10830USA $221.96	10830USA $221.96	10830USA $221.96	10830USA $221.96

	1-1/2"	**2"**	**2-1/2"**	**3"**	**4"**	**6"**	**8"**
Riser Check Valve and Trim *(IPG V259 / V222)*							
Riser Check Valve Threaded	10659 $1,120.04	10667 $1,294.97	**N/A**	**N/A**	**N/A**	**N/A**	**N/A**
Riser Check Valve Flange / Flange	**N/A**	**N/A**	**N/A**	08505 $1,860.75	08508 $1,917.26	08511 $3,161.20	**N/A**
Riser Check Valve Flange / Groove	**N/A**	**N/A**	**N/A**	08506 $1,578.11	08509 $1,624.35	08512 $2,688.26	08515 $3,804.99
Riser Check Valve Groove / Groove	11054 $1,120.04	11059 $1,294.97	07929 $1,341.59	08507 $1,341.59	08510 $1,341.59	08513 $2,482.72	08516 $3,515.89
Riser Check Valve Trim *(For Preaction)*	12960 $378.80	12960 $378.80	13776 $948.97	13776 $948.97	13777 $1,003.14	13777 $1,003.14	13777 $1,003.14

Riser check valve trim includes system main drain valve and air pressure gauge.

Please contact your customer service center for price and availability of non-interlocked preaction systems.

Preaction System - Double Interlocked - Pneumatic/Pneumatic Release

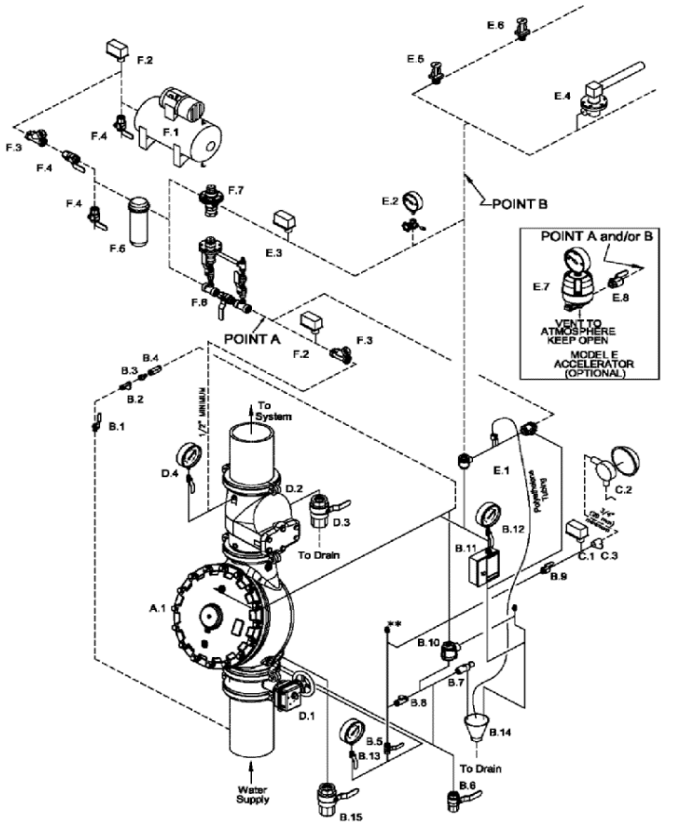

Dashed lines indicate pipe required but not included with Deluge Valve Conventional Trim and Easy Riser Check Valve Trim Packages.

* Viking Deluge Valve Trim Packages contain items B.1 through B.15 and associated nipples. Viking Accessory Package for Conventional Deluge Valve Trim contains B.2 through B.5, B.7 through B.11, and B.14.

SYSTEM COMPONENTS

A. Valve
- A.1 Deluge Valve

B. Deluge Valve Conventional Trim *
- (See Deluge Valve Conventional Trim Charts)
- B.1 Priming Valve (Normally Open)
- B.2 Strainer
- B.3 1/16" Restricted Orifice
- B.4 Spring Loaded Check Valve
- B.5 Alarm Test Valve (Normally Closed)
- B.6 Auxiliary Drain Valve (Normally Closed)
- B.7 Drip Check Valve
- B.8 Drain Check Valve
- B.9 Alarm Shut-Off Valve (Normally Open)
- B.10 Pressure Operated Relief Valve (P.O.R.V.)
- B.11 Emergency Release
- B.12 Priming Pressure Water Gauge and Valve
- B.13 Water Supply Pressure Gauge and Valve
- B.14 Drain Cup
- B.15 Flow Test Valve (Normally Closed)

C. Water Flow Alarm Equipment
- C.1 Alarm Pressure Switch and/or
- C.2 Water Motor Alarm (Strainer Required)
- C.3 Strainer

D. Riser
- D.1 Water Supply Control Valve
- D.2 Easy Riser Check Valve or rubber seated check valve
- D.3 Sprinkler System Main Drain
- D.4 System Pressure Gauge and Valve

E. Release System
- E.1 Pneumatic/Pneumatic Release Module Trim
- E.2 Air Pressure Gauge and Valve
- E.3 Air Pressure Supervisory Switch
- E.4 Thermostatic Release and/or
- E.5 Fixed Temperature Release and/or
- E.6 Pilot Head (Sprinkler)
- E.7 Accelerator (Optional. See Inset.)
- E.8 Accelerator Isolation Valve (See Inset.)

F. Air Supply
- F.1 Tank Mounted Air Compressor
- F.2 Air Supervisory Pressure Switch (Compressor On/Off Control Switch)
- F.3 Soft Seat Check Valve
- F.4 Shut Off Valve (Indicating Ball Valve recommended.)
- F.5 Dehydrator
- F.6 Air maintenance Device & By-Pass Trim
- F.7 Air maintenance Device
- F.8 Air Pressure Supervisory Switch
- F.9 Soft Seat Swing Check Valve

Model F Deluge / Preaction Valve* - STRAIGHT THROUGH

V233	1-1/2"	2"	2-1/2"	3"	4"	6"	8"
Thread X Thread	12126 $4,781.59	12059 $4,942.18	12401 $6,526.22	N/A	N/A	N/A	N/A
Flange X Flange	N/A	N/A	N/A	12014 $6,526.22	11953 $8,501.01	11955 $11,627.84	11991 $26,338.47
Flange X Groove	N/A	N/A	N/A	12018 $6,526.22	11952 $8,501.01	11954 $11,627.84	N/A
Groove X Groove	12125 $4,781.59	12057 $4,942.18	12403 $6,526.22	12022 $6,526.22	11513 $8,501.01	11524 $11,627.84	11018 $26,338.47

See page O-19-20 for additional valve and trim options, including Halar® coated valves, horizontal trim, domestic trim, and brass trim packages.

** Valve is not included in trim packages. Please order separately. See following page for trim packages and equipment.*

Preaction System - Double Interlocked - Pneumatic/Pneumatic Release

	1-1/2"	2"	2-1/2"	3"	4"	6"	8"
Trim (Vertical - Straight Through Valve) - Galvanized *(IPG V236)*							
Loose Trim *(incl. accessory pkg-09316)*	14634-1 $5,329.24	14634-1 $5,329.24	14636-1 $5,215.35	14636-1 $5,215.35	14639-1 $5,457.32	14641-1 $5,470.13	14642-1 $7,923.71
Modular Trim *(incl. accessory pkg-09316)*	14634-1P $5,810.40	14634-1P $5,810.40	14636-1P $5,696.46	14636-1P $5,696.46	14639-1P $5,940.73	14641-1P $5,953.48	14642-1P $8,407.08

	1-1/2"	2"	2-1/2"	3"	4"	6"	8"
Releasing Devices *(IPG V226)*							
Pneumatic Actuator	06459B $1,029.29	06459B $1,029.29	06459B $1,029.29	06459B $1,029.29	06459B $1,029.29	06459B $1,029.29	06459B $1,029.29

On pneumatic/pneumatic preaction systems only, releasing devices (pneumatic actuators) are included in releasing trim.

Releasing Trim - Galvanized *(IPG V238)*							
Loose Trim	12662-1 $2,771.31	12662-1 $2,771.31	12662-1 $2,771.31	12662-1 $2,771.31	12662-1 $2,771.31	12662-1 $2,771.31	12662-1 $2,771.31
Modular Trim	12662-1P P.O.A.	12662-1P P.O.A.	12662-1P P.O.A.	12662-1P P.O.A.	12662-1P P.O.A.	12662-1P P.O.A.	12662-1P P.O.A.

On pneumatic/pneumatic preaction systems only, releasing devices (pneumatic actuators) are included in releasing trim.

	1-1/2"	2"	2-1/2"	3"	4"	6"	8"
Riser Check Valve and Trim *(IPG V259 / V222)*							
Riser Check Valve Threaded	10659 $1,120.04	10667 $1,294.97	N/A	N/A	N/A	N/A	N/A
Riser Check Valve Flange / Flange	N/A	N/A	N/A	08505 $1,860.75	08508 $1,917.26	08511 $3,161.20	N/A
Riser Check Valve Flange / Groove	N/A	N/A	N/A	08506 $1,578.11	08509 $1,624.35	08512 $2,688.26	08515 $3,804.99
Riser Check Valve Groove / Groove	11054 $1,120.04	11059 $1,294.97	07929 $1,341.59	08507 $1,341.59	08510 $1,341.59	08513 $2,482.72	08516 $3,515.89
Riser Check Valve Trim *(For Preaction)*	12960 $378.80	12960 $378.80	13776 $948.97	13776 $948.97	13777 $1,003.14	13777 $1,003.14	13777 $1,003.14

Riser check valve trim includes system main drain valve and air pressure gauge.

Preaction System - Double Interlocked - Electric/Pneumatic Release

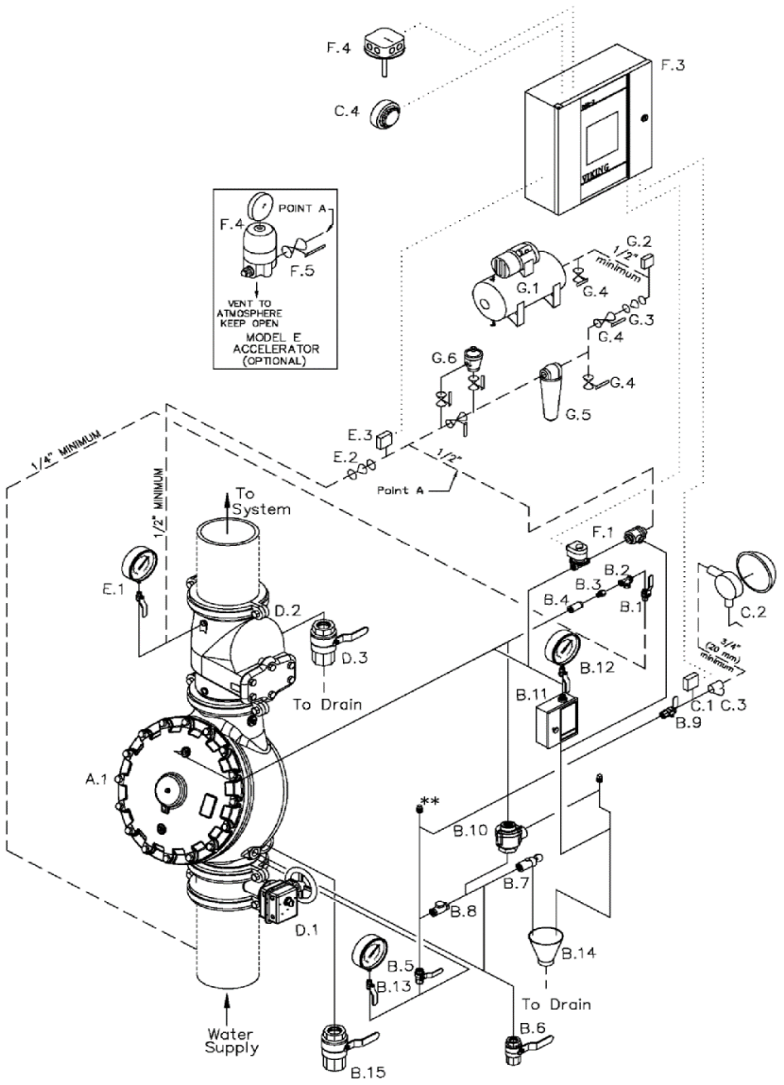

Components shown above are included in QuikPik packages as customized by user. See page O-9.

Description

A.1 Model F deluge valve
Deluge valve conventional trim including:
B.1 Priming connection ball valve (N.O.)
B.2 Y strainer
B.3 Restricted orifice
B.4 Spring loaded in-line check valve
B.5 Alarm test valve (normally closed)
B.6 Auxiliary drain valve (normally closed)
B.7 Drip check valve
B.8 Drain check valve
B.9 Alarm shut-off valve (normally open)
B.10 Pressure operated relief valve (porv)
B.11 Model C emergency release
B.12 Priming pressure water gauge & valve
B.13 Water supply pressure gauge & valve
B.14 Drain cup
B.15 Flow test valve (normally closed)
C.1 Alarm pressure switch and/or
C.2 Model F-2 water motor alarm including:
C.3 3/4" / DN20 alarm line Y strainer
C.4 Electric alarm bell
D.1 Water supply control valve
D.2 Easy Riser® check valve & trim including:
D.3 System main drain valve
E.1 Air pressure gauge and valve
E.2 Soft seat air supply check valve
E.3 Air pressure supervisory switch
F.1 Electric/pneumatic release module trim
F.1 Solenoid valve (normally closed)
F.1 Pneumatic actuator
F.3 VFR500 release control panel
F.4 Electric detection system
F.4 Model E-1 accelerator (optional)
F.5 Accelerator isolation ball valve
G.1 Automatic air supply
G.2 Air pressure supervisory switch
G.3 Soft seat air supply check valve
G.4 Shut-off ball valve
G.5 Dehydrator package
G.6 D-2 air maintenance device and by-pass trim

Model F Deluge / Preaction Valve* - STRAIGHT THROUGH

V233	1-1/2"	2"	2-1/2"	3"	4"	6"	8"
Thread X Thread	12126 $4,781.59	12059 $4,942.18	12401 $6,526.22	N/A	N/A	N/A	N/A
Flange X Flange	N/A	N/A	N/A	12014 $6,526.22	11953 $8,501.01	11955 $11,627.84	11991 $26,338.47
Flange X Groove	N/A	N/A	N/A	12018 $6,526.22	11952 $8,501.01	11954 $11,627.84	N/A
Groove X Groove	12125 $4,781.59	12057 $4,942.18	12403 $6,526.22	12022 $6,526.22	11513 $8,501.01	11524 $11,627.84	11018 $26,338.47

** Valve is not included in trim packages. Please order separately. See following page for trim packages and equipment.*

Preaction System - Double Interlocked - Electric/Pneumatic Release

TrimPac® *V234*	**1-1/2"**	**2"**	**2-1/2"**	**3"**	**4"**	**6"**	**8"**
Straight-Through	13794B-5 $9,979.96	13794B-5 $9,979.96	13794B-5 $9,979.96	13794B-5 $9,979.96	13794B-5 $9,979.96	13794B-5 $9,979.96	13794B-5 $9,979.96

TrimPac® includes conventional trim, releasing devices, releasing trim, and flexible hose kit.
Drain package for TrimPac® must be ordered separately (see below).

Drain Package *(IPG V257)*

Use with TrimPac® *(order separately)*	11894-1 $876.54	11894-2 $709.00	11894-3 $803.47	11894-3 $803.47	11894-4 $1,031.22	11894-4 $1,031.22	11894-4 $1,031.22

	1-1/2"	**2"**	**2-1/2"**	**3"**	**4"**	**6"**	**8"**
Trim (Vertical - Straight Through Valve) - Galvanized *(IPG V236)*							
Loose Trim *(incl. accessory pkg-09316)*	14634-1 $5,329.24	14634-1 $5,329.24	14636-1 $5,215.35	14636-1 $5,215.35	14639-1 $5,457.32	14641-1 $5,470.13	14642-1 $7,923.71
Modular Trim *(incl. accessory pkg-09316)*	14634-1P $5,810.40	14634-1P $5,810.40	14636-1P $5,696.46	14636-1P $5,696.46	14639-1P $5,940.73	14641-1P $5,953.48	14642-1P $8,407.08

	1-1/2"	**2"**	**2-1/2"**	**3"**	**4"**	**6"**	**8"**
Releasing Devices							
Solenoid Valve *IPG V240*	11601 $1,597.55	11601 $1,597.55	11601 $1,597.55	11601 $1,597.55	11601 $1,597.55	11601 $1,597.55	11601 $1,597.55
Pneumatic Actuator *IPG V226*	06459B $1,029.29	06459B $1,029.29	06459B $1,029.29	06459B $1,029.29	06459B $1,029.29	06459B $1,029.29	06459B $1,029.29
Releasing Trim - Galvanized *(IPG V238)*							
Loose Trim *(releasing device not incl.)*	12661-1 $172.77	12661-1 $172.77	12661-1 $172.77	12661-1 $172.77	12661-1 $172.77	12661-1 $172.77	12661-1 $172.77
Modular Trim *(releasing device not incl.)*	12661-1P $689.96	12661-1P $689.96	12661-1P $689.96	12661-1P $689.96	12661-1P $689.96	12661-1P $689.96	12661-1P $689.96
Loose Trim - DOMESTIC *(releasing device not incl.)*	12661-1USA $230.37	12661-1USA $230.37	12661-1USA $230.37	12661-1USA $230.37	12661-1USA $230.37	12661-1USA $230.37	12661-1USA $230.37

	1-1/2"	**2"**	**2-1/2"**	**3"**	**4"**	**6"**	**8"**
Riser Check Valve and Trim *(IPG V259 / V222)*							
Riser Check Valve Threaded	10659 $1,120.04	10667 $1,294.97	**N/A**	**N/A**	**N/A**	**N/A**	**N/A**
Riser Check Valve Flange / Flange	**N/A**	**N/A**	**N/A**	08505 $1,860.75	08508 $1,917.26	08511 $3,161.20	**N/A**
Riser Check Valve Flange / Groove	**N/A**	**N/A**	**N/A**	08506 $1,578.11	08509 $1,624.35	08512 $2,688.26	08515 $3,804.99
Riser Check Valve Groove / Groove	11054 $1,120.04	11059 $1,294.97	07929 $1,341.59	08507 $1,341.59	08510 $1,341.59	08513 $2,482.72	08516 $3,515.89
Riser Check Valve Trim *(For Preaction)*	12960 $378.80	12960 $378.80	13776 $948.97	13776 $948.97	13777 $1,003.14	13777 $1,003.14	13777 $1,003.14

Riser check valve trim includes system main drain valve and air pressure gauge.

Preaction System - Double Interlocked - Electric/Pneu-lectric Release

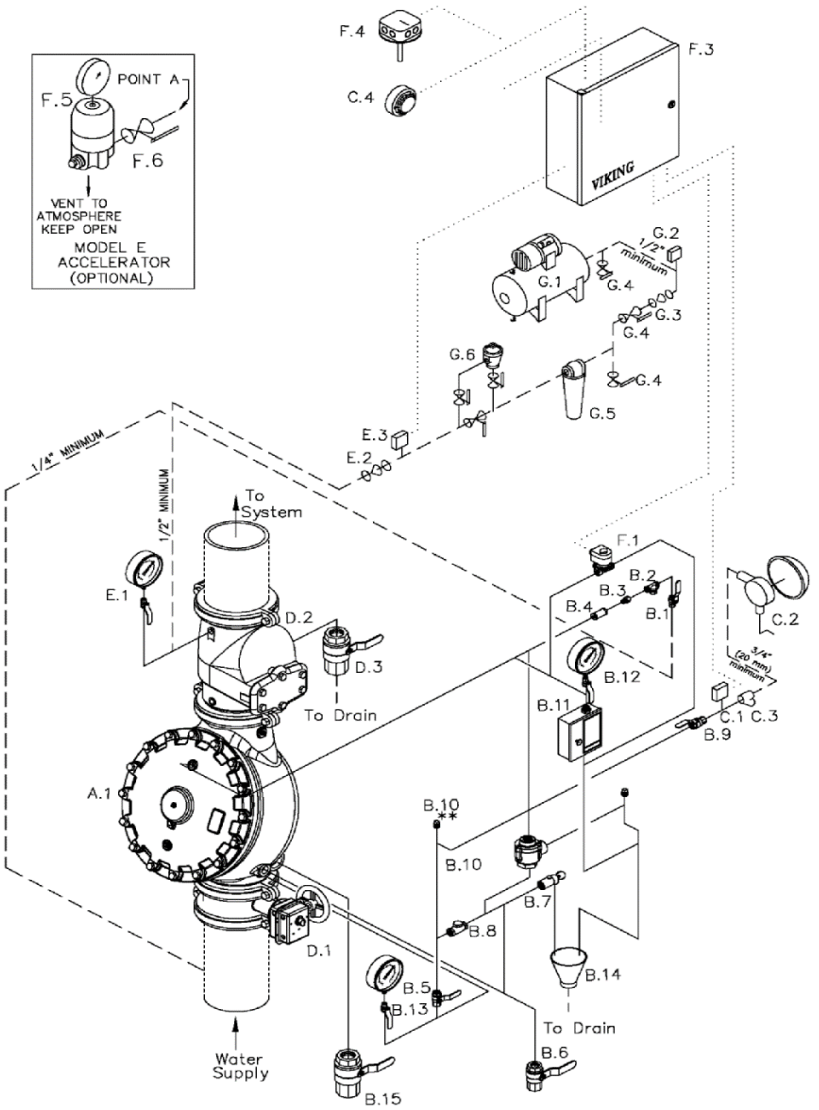

Components shown above are included in Quik Pik packages as customized by user. See page O-11.

Description

A.1 Deluge valve
Deluge valve conventional trim including:
B.1 Priming connection ball valve (N.O.)
B.2 Y strainer
B.3 Restricted orifice
B.4 Spring loaded in-line check valve
B.5 Alarm test valve (normally closed)
B.6 Auxiliary drain valve (normally closed)
B.7 Drip check valve
B.8 Drain check valve
B.9 Alarm shut-off valve (normally open)
B.10 Pressure operated relief valve (PORV)
B.11 Model c emergency release
B.12 Priming pressure water gauge & valve
B.13 Water supply pressure gauge & valve
B.14 Drain cup
B.15 Flow test valve (normally closed)
C.1 Alarm pressure switch and/or
C.2 Model F-2 water motor alarm including:
C.3 3/4" / DN20 alarm line Y strainer
C.4 Electric alarm bell
D.1 Water supply control valve
D.2 Easy Riser® check valve
Easy Riser® trim for preaction (including)
D.3 System main drain valve
E.1 Air pressure gauge and valve
E.2 Soft seat air supply check valve
E.3 Air pressure supervisory switch
F.1 Solenoid valve (normally closed)
F.2 Electric release module trim
F.3 VFR-500 Release control panel
F.4 Electric detection system
F.5 Model E-1 accelerator (optional)
F.6 Accelerator isolation ball valve
G.1 Automatic air supply
G.2 Air pressure supervisory switch
G.3 Soft seat air supply check valve
G.4 Shut-off ball valve
G.5 Dehydrator package
G.6 D-2 air maintenance device & by-pass trim

Model F Deluge / Preaction Valve* - STRAIGHT THROUGH

V233	1-1/2"	2"	2-1/2"	3"	4"	6"	8"
Thread X Thread	12126 $4,781.59	12059 $4,942.18	12401 $6,526.22	N/A	N/A	N/A	N/A
Flange X Flange	N/A	N/A	N/A	12014 $6,526.22	11953 $8,501.01	11955 $11,627.84	11991 $26,338.47
Flange X Groove	N/A	N/A	N/A	12018 $6,526.22	11952 $8,501.01	11954 $11,627.84	N/A
Groove X Groove	12125 $4,781.59	12057 $4,942.18	12403 $6,526.22	12022 $6,526.22	11513 $8,501.01	11524 $11,627.84	11018 $26,338.47

** Valve is not included in trim packages. Please order separately. See following page for trim packages and equipment.*

Preaction System - Double Interlocked - Electric/Pneu-lectric Release

TrimPac® *V234*	**1-1/2"**	**2"**	**2-1/2"**	**3"**	**4"**	**6"**	**8"**
Straight-Through	13796B-6 $8,490.86	13796B-6 $8,490.86	13796B-6 $8,490.86	13796B-6 $8,490.86	13796B-6 $8,490.86	13796B-6 $8,490.86	13796B-6 $8,490.86

TrimPac® includes conventional trim, releasing device (solenoid valve), releasing trim, and flexible hose kit.
Drain package for TrimPac® must be ordered separately (see below).

Drain Package *(IPG V257)*

Use with TrimPac® *(order separately)*	11894-1 $876.54	11894-2 $709.00	11894-3 $803.47	11894-3 $803.47	11894-4 $1,031.22	11894-4 $1,031.22	11894-4 $1,031.22

	1-1/2"	**2"**	**2-1/2"**	**3"**	**4"**	**6"**	**8"**
Trim (Vertical - Straight Through Valve) - Galvanized *(IPG V236)*							
Loose Trim *(incl. accessory pkg-09316)*	14634-1 $5,329.24	14634-1 $5,329.24	14636-1 $5,215.35	14636-1 $5,215.35	14639-1 $5,457.32	14641-1 $5,470.13	14642-1 $7,923.71
Modular Trim *(incl. accessory pkg-09316)*	14634-1P $5,810.40	14634-1P $5,810.40	14636-1P $5,696.46	14636-1P $5,696.46	14639-1P $5,940.73	14641-1P $5,953.48	14642-1P $8,407.08

	1-1/2"	**2"**	**2-1/2"**	**3"**	**4"**	**6"**	**8"**
Releasing Devices *(IPG V240)*							
Solenoid Valve	11601 $1,597.55	11601 $1,597.55	11601 $1,597.55	11601 $1,597.55	11601 $1,597.55	11601 $1,597.55	11601 $1,597.55
Releasing Trim - Galvanized *(IPG V238)*							
Loose Trim *(releasing device not incl.)*	10830 $166.50	10830 $166.50	10830 $166.50	10830 $166.50	10830 $166.50	10830 $166.50	10830 $166.50
Modular Trim *(releasing device not incl.)*	10830P $718.70	10830P $718.70	10830P $718.70	10830P $718.70	10830P $718.70	10830P $718.70	10830P $718.70
Loose Trim - DOMESTIC *(releasing device not incl.)*	10830USA $221.96	10830USA $221.96	10830USA $221.96	10830USA $221.96	10830USA $221.96	10830USA $221.96	10830USA $221.96

	1-1/2"	**2"**	**2-1/2"**	**3"**	**4"**	**6"**	**8"**
Riser Check Valve and Trim *(IPG V259 / V222)*							
Riser Check Valve Threaded	10659 $1,120.04	10667 $1,294.97	**N/A**	**N/A**	**N/A**	**N/A**	**N/A**
Riser Check Valve Flange / Flange	**N/A**	**N/A**	**N/A**	08505 $1,860.75	08508 $1,917.26	08511 $3,161.20	**N/A**
Riser Check Valve Flange / Groove	**N/A**	**N/A**	**N/A**	08506 $1,578.11	08509 $1,624.35	08512 $2,688.26	08515 $3,804.99
Riser Check Valve Groove / Groove	11054 $1,120.04	11059 $1,294.97	07929 $1,341.59	08507 $1,341.59	08510 $1,341.59	08513 $2,482.72	08516 $3,515.89
Riser Check Valve Trim *(For Preaction)*	12960 $378.80	12960 $378.80	13776 $948.97	13776 $948.97	13777 $1,003.14	13777 $1,003.14	13777 $1,003.14

Riser check valve trim includes system main drain valve and air pressure gauge.

Model VXD Double Interlock Preaction System, Electric/Pneu-Lectric Release with Model EA-1

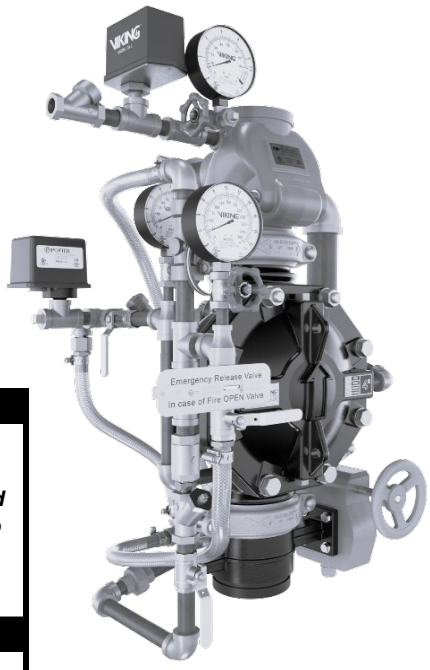

Model EA-1 Electronic Accelerator*
**See page O-16 for list price*

Pretrimmed Option

Pretrimmed Riser assemblies include the model VXD Deluge Valve, riser check valve, pressure switches,releasing solenoid, water supply control valve, grooved connections for installation, and the EA-1 all completely assembled and ready to install into the riser.

IPG: V405	4"	6"	8"
Galvanized Pretrimmed Riser (PTR)	26680 $26,142.56	26682 $26,916.84	26684 $40,151.40

Loose Trim Options

Loose trim packages DO NOT include the model VXD Deluge Valve, riser check valve, pressure switch(es), or water supply control valve. These packages include the Model EA-1 Accelerator and the CoilKeeper. Refer to the trim diagrams for detailed component information.

IPG: V401	4"	6"	8"	10"
Galvanized Loose Trim	27463-1 $11,806.55	27465-1 $11,806.55	27467-1 $14,254.49	27469-1 $14,254.49

IPG: V401	4"	6"	8"	10"
Brass Loose Trim	27463-2 $13,613.41	27465-2 $13,613.41	27467-2 $16,793.10	27469-2 $16,793.10

SureFire® Preaction System - Single/Double Interlocked

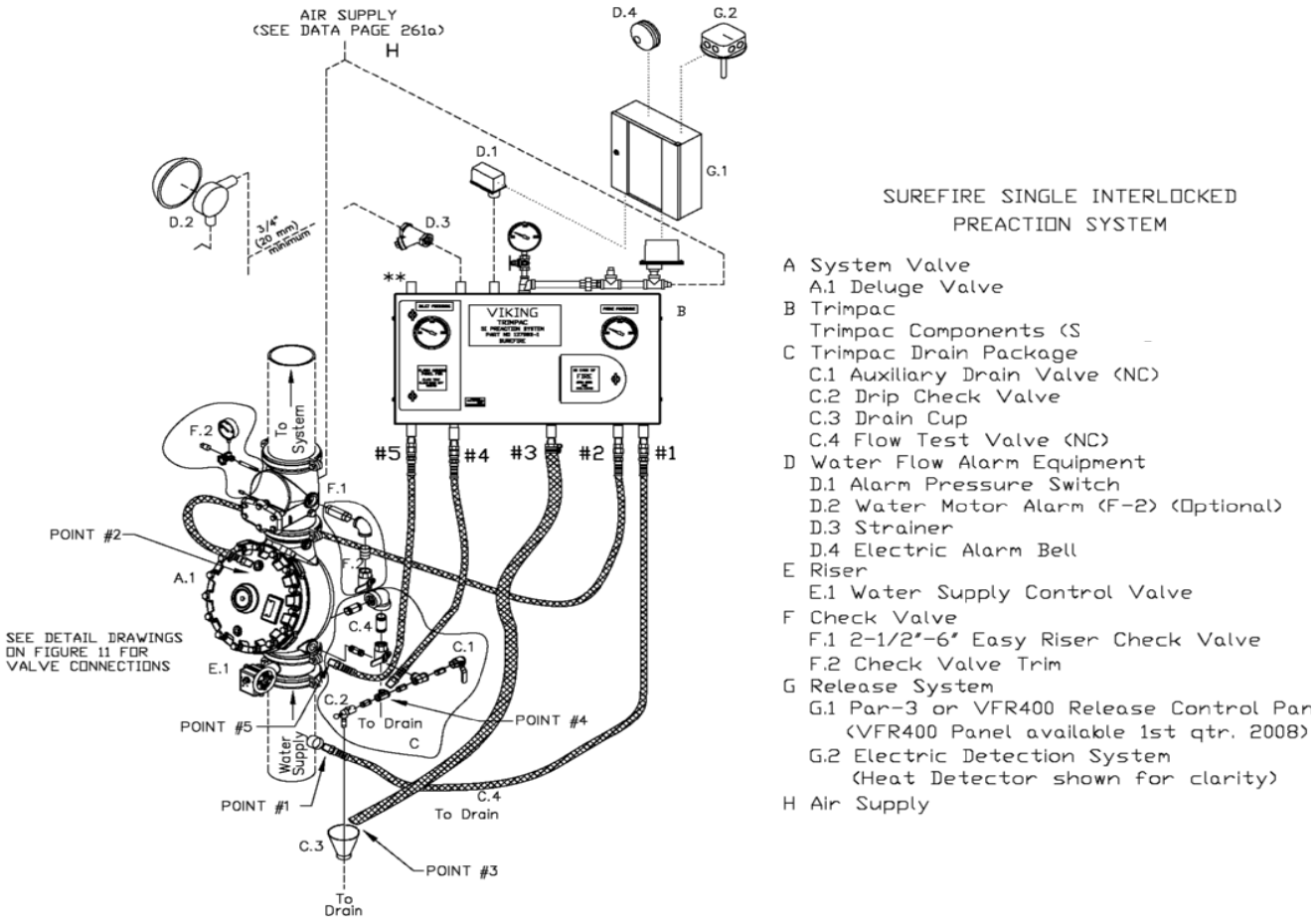

Components shown above are included in Quik Pik packages as customized by user. See page O-13.

Model F Deluge / Preaction Valve* - STRAIGHT THROUGH

V233	1-1/2"	2"	2-1/2"	3"	4"	6"	8"
Thread X Thread	12126 $4,781.59	12059 $4,942.18	12401 $6,526.22	N/A	N/A	N/A	N/A
Flange X Flange	N/A	N/A	N/A	12014 $6,526.22	11953 $8,501.01	11955 $11,627.84	11991 $26,338.47
Flange X Groove	N/A	N/A	N/A	12018 $6,526.22	11952 $8,501.01	11954 $11,627.84	N/A
Groove X Groove	12125 $4,781.59	12057 $4,942.18	12403 $6,526.22	12022 $6,526.22	11513 $8,501.01	11524 $11,627.84	11018 $26,338.47

See page O-19-20 for additional valve and trim options, including Halar® coated valves, horizontal trim, domestic trim, and brass trim packages.

** Valve is not included in trim packages. Please order separately. See following page for trim packages and equipment.*

SureFire® Preaction System - Single/Double Interlocked

Viking's SureFire® fail safe preaction system is available in TrimPac arrangement only. Loose or modular trim not offered.

TrimPac®[1,2,3] *V234*	**1-1/2"**	**2"**	**2-1/2"**	**3"**	**4"**	**6"**	**8"**
Single Interlock	13798D-1	13798D-1	13798D-1	13798D-1	13798D-1	13798D-1	13798D-1
(includes release & trim)	$11,464.39	$11,464.39	$11,464.39	$11,464.39	$11,464.39	$11,464.39	$11,464.39
Double Interlock	13799D-2	13799D-2	13799D-2	13799D-2	13799D-2	13799D-2	13799D-2
(includes release & trim)	$12,537.80	$12,537.80	$12,537.80	$12,537.80	$12,537.80	$12,537.80	$12,537.80

(1) SureFire® TrimPac® systems include conventional trim, releasing device, releasing trim, and flexible hose kit.
(2) Drain package for TrimPac® must be ordered separately (see below).
(3) Galvanized trim. Brass trim options shown on page O-19.

Drain Package *(IPG V257)*

Use with TrimPac®	11894-1	11894-2	11894-3	11894-3	11894-4	11894-4	11894-4
(order separately)	$876.54	$709.00	$803.47	$803.47	$1,031.22	$1,031.22	$1,031.22

Riser Check Valve and Trim *(IPG V259 / V222)*	**1-1/2"**	**2"**	**2-1/2"**	**3"**	**4"**	**6"**	**8"**
Riser Check Valve Threaded	10659 $1,120.04	10667 $1,294.97	**N/A**	**N/A**	**N/A**	**N/A**	**N/A**
Riser Check Valve Flange / Flange	**N/A**	**N/A**	**N/A**	08505 $1,860.75	08508 $1,917.26	08511 $3,161.20	**N/A**
Riser Check Valve Flange / Groove	**N/A**	**N/A**	**N/A**	08506 $1,578.11	08509 $1,624.35	08512 $2,688.26	08515 $3,804.99
Riser Check Valve Groove / Groove	11054 $1,120.04	11059 $1,294.97	07929 $1,341.59	08507 $1,341.59	08510 $1,341.59	08513 $2,482.72	08516 $3,515.89
Riser Check Valve Trim *(For Preaction)*	12960 $378.80	12960 $378.80	13776 $948.97	13776 $948.97	13777 $1,003.14	13777 $1,003.14	13777 $1,003.14

Riser check valve trim includes system main drain valve and air pressure gauge.

Accessories for TrimPac®

Replacement Hose *V234*

PVC drain hose	12071	$233.57

Riser Mounting Kit *V234*

(use when mounting TrimPac® unit to riser)

Vertical	11900	$1,621.97
Horizontal	11901	$2,230.32

Air Line Trim - TANK MOUNTED *V234*

(not for use with Deluge TrimPac® Systems)

13770	$2,932.66

Air Line Trim - TANKLESS *V234*

(not for use with Deluge TrimPac® Systems)

13771	$1,858.06

Accessories and Additional Components

In-Line Check Valves

Model K-1 (threaded)

1½"	10659	$1,120.04
2"	10667	$1,294.97

Model L-1 (grooved)

½"	11054	$1,120.04
2"	11059	$1,294.97

IPG V259

In-Line Check Valve Trim (1-1/2" - 2")

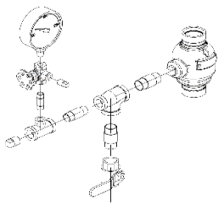

Model L-1 / K-1
12960 $378.80

IPG V222

Ball Valve

IPG V226

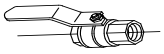

Brass			Stainless Steel	
1/4"	10354USA	$74.68	10645	$444.76
1/2"	10355USA	$76.90	10646	$709.40
1"	10356	$106.25	10647	$859.91
			10648	$1,639.12
			10649	$2,224.90

Pressure Operated Relief Valve (PORV) - Model D-3

½" / DN15
Brass
16970 $2,403.04

IPG V242

Pressure Operated Relief Valve (PORV) - Model D-4

½" / DN15
Corrosion Resistant
16971 $3,696.98

IPG V242

Restricted Orifice

IPG V226

1/4 " (DN8)
1/16" (1.6mm) 10110 $62.22
Corrosion Resistant
1/16" (1.6mm) 10110J $145.03

Air Gauge

0-300 psi (2068 kPa)

1/4" / DN8
VAIRSF $29.92

IPG SR295

Globe Valve for Gauges (side outlet)

1/4" / DN8
76V-25 $26.52

IPG V226

Drip Check Valve - Model D-1

Velocity Check

3/4" / DN20
10730 $314.48
Corrosion Resistant (D-4)
10733 $474.35

IPG V226

Drain Cup

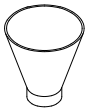

1½" / DN40
01019B $30.80

IPG V226

Drain Check Valve

IPG V226

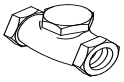

1/2" / DN15
05781A $160.03
Corrosion Resistant
05781AJ $334.79

Y Strainer

IPG SR260

1/4" / DN15
14BYS $43.22

Water Gauge

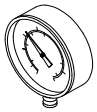

0-300 psi
1/4" VWATERSF $31.27

IPG SR295

In-Line Check Valve

IPG V226

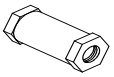

1/4" / DN8
04947A $148.86

Accessories for TrimPac® *(IPG V234)*

Riser Mounting Kit

(when mounting TrimPac to riser)

Vertical	11900	$1,621.97
Horizontal	11901	$2,230.32

Replacement Hose

PVC drain hose	12071	$233.57

Restricted Orifice

5/64" / 2mm

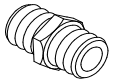

1/2" / DN15
11706 $128.52

IPG V226

EA-1 Electronic Accelerator

27327 $3,634.27

IPG V226

Emergency Release

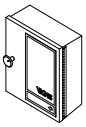

1/2" (Galvanized)		Brass		Corrosion Resistant	
Model C-1		Model C-2		Model C-3	
01553C	$614.74	09387	$1,025.43	09734	$1,258.05

IPG V226

Air Line Trim

(not for use with Deluge TrimPac System)

Tank Mounted	13770	$2,932.66
Tankless	13771	$1,858.06

Prime Shut-Off Valve

1/2" / DN15 IPG V226
10723 $1,361.58
Corrosion Resistant
10724 $2,433.74

Accessories for Old Style Trim

A-2 Strainer Orifice Chk Vlv

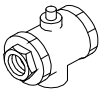

1/4" (DN8)
06579B $584.48

V226

Alarm Test/Alarm Shut-Off Valve

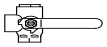

1/2" (DN15)
06174A $629.32

V226

Spring Loaded Check Valve

(with viton disc)

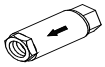

1/2" (DN15)
12WILC $289.70

SR140

Accessories for Pneumatic Release Systems

Pneumatic Actuator

1/2" (DN15)
Model H-1
06459B $1,029.29
Corrosion Resistant (Model R-1)
09733 $2,322.05

IPG V226

Accelerator (Model E-1)

Model E-1	List
08055	$2,545.24

IPG V226

Model D-2 - Air Pressure Maintenance Device

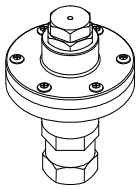

Size	Part #	List Price
¼" / DN8	02280C	$1,215.26

IPG V226

Model D-2 - Air Pressure Maintenance Device

Size	Part #	List Price
½" / DN15	07459	$2,135.55
DOMESTIC		
Size	**Part #**	**List Price**
½" / DN15	07459USA	$2,847.38

IPG V226

Dehydrator Package

Includes:
- Desiccant
- Mounting Brackets
- Nipples

	1/4" (DN8)	
	16854	$2,875.36
	Extra Desiccant*	
	16855	$651.03

**one unit fills dehydrator*

IPG V226

Replacement Restriction

Release Line Air Supply

Part #	List Price
02902B	$294.44

IPG V226

Accessories for Pneumatic and Hydraulic Systems

Thermostatic Release (Model C-1)

(Includes 155°F/68°C fixed temperature release)
- indoor and outdoor use

Standard	
01432C	$2,722.50
Nitrogen Tested	
05006A	$2,932.80

IPG V226

Thermostatic Release (Model C-2)

(Includes 155°F/68°C fixed temperature release)
- indoor and outdoor use
- corrosion resistant
- for use in salt water environments

Standard	
03991C-18	$3,239.70
Nitrogen Tested	
10367	$3,450.02

IPG V226

Fixed Temperature Release (Model M HP - VK800)

1/2" (15 mm) - RATED TO 250 PSI (1724 kPa) IPG V226

Brass	07848AB	$86.36
Chrome	07848FB	$92.58
White	07848MB/W	$94.35

Add the temperature suffix to the part number (155 deg shown):
(°F/°C) A=135°/57°, B=155°/68°, D=175°/79°, E=200°/93°, G=286°/141°

Replacement Fixed Temperature Release

155°F/68°C

Model C-1	
07848FB	$92.58
Model C-2	
07848CB	$110.38

IPG V226

Operation Indicator

Includes:
- indoor and outdoor use
- corrosion resistant

1/2" (DN15)	
02944A	$106.81

IPG V226

Adjustment Kit

Includes:
- indoor and outdoor use
- corrosion resistant

Model C-1 and C-2
01714A $325.50

IPG V226

Release Line Hangers

IPG V226

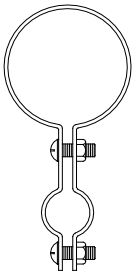

(includes two screws/nuts)

1" / DN25	09574	$36.37
1¼" / DN32	09575	$36.37
1½" / DN40	09576	$36.37
2" / DN50	09577	$36.37
2½" / DN65	09578	$36.37
3" / DN80	09579	$36.37

3½" / DN90	09580	$36.37
4" / DN100	09581	$53.18
5" / DN125	09582	$53.18
6" / DN150	09583	$53.18
8" / DN200	09584	$53.18

Stainless steel available upon request at additional cost. Add suffix "SST" to base part number.

Accessories for Electric Release Systems

SOLENOID VALVES *(1/2" / DN15)* — *IPG V240*

Normally Closed *(rated to 250 psi (1724 kPa)*

		Part No.	List Price
Deluge & Preaction, SureFire			
NEMA 1,2,3,3S,4,4X	24 VDC	11601	$1,597.55
Explosion Proof			
NEMA 3,3S,4,4X,6,6P,7,9	24 VDC	11602	$2,669.90

Normally Closed *(rated to 300 psi (2068 kPa)*

Firecycle III, TotalPac & Special Application			
NEMA 2,3,3S,4,4X	24 VDC	11591	$2,039.72
NEMA 1,2,3,3S,4,4X	110 VAC/50 HZ	11593	$1,735.66
NEMA 1,2,3,3S,4,4X	120 VAC/60 HZ	11594	$2,360.32
Explosion Proof			
NEMA 3,3S,4,4X,6,6P,7,9	24 VDC	11592	$2,669.90
NEMA 3,3S,4,4X,6,6P,7,9	110 VAC/50 HZ	11594	$2,360.32
NEMA 3,3S,4,4X,6,6P,7,9	120 VAC/60 HZ	11594	$2,360.32
ATEX, EEx, mII, T4/T5	110 VAC/50 HZ	12359	$2,802.46
ATEX, EEx, mII, T4/T5	24 VDC	12360	$3,112.07

Normally Open *(rated to 300 psi (2068 kPa)*

Firecycle III			
NEMA 2,3,3S,4,4X	24 VDC	11595	$3,394.02
Surefire & TrimPac			
NEMA 2,3,3S,4,4X	24 VDC	13215	$3,394.02
Explosion Proof			
NEMA 3,3S,4,4X,6,6P,7,9	24 VDC	11596	$4,731.68
ATEX, EEx, mII, T4/T5	24 VDC	12358	$5,173.77

RELEASE CONTROL PANEL (VFR-500) — *IPG V241*

VFR-500 Release Control Panel

- Contains seven user-definable zones and menu-driven programming control
- Up to 35 standard programs in memory and programmable cross-zoning
- Multi-directional navigation through the panel history and menus
- cULus Listed and FM Approved for agent and/or water-based extinguishing

Part No.	List Price
26107	$6,650.15

** see below for accessories and optional modules*

Optional Modules / Accessories	Part No.	List Price
CA2Z Module (class A initiating device circuit):	14155	$397.02
CAM2 Module (class A indicating appliance circuit):	14156	$456.57
ARM-1/ARM-2 Module (auxiliary relay module):	14157	$575.68
RA-4410-RC (remote annunciator):	26125	$1,879.67
MR-101/T SPDT Relay Module:	14159	$233.29
MR-201 DPDT Relay Module:	14160	$292.79
MR801/T SPDT Relay w/Led Indicator:	14161	$124.07
ELOD Resistor/Diode:	14162	$59.55
ELOR Resistor:	14163	$10.36

Batteries *(two required per panel)*

	Part No.	List Price
8 Amp	07920	P.O.A.
12 Amp	07921	P.O.A.
18 Amp	09867	P.O.A.

Alarm Devices

Alarm Pressure Switch - SR020

Adjustable Range (4-20 psi)

1/2" / DN50

Single SPDT	PS101A	$333.57
Dual SPDT	PS102A	$399.41

** Manufactured by Potter*

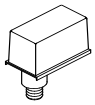

Explosion Proof

Dual SPDT	PS10-EX	$2,330.63
Dual SPDT	PS40EX	$2,330.63

** Cenelec approved*

Pressure Adj Access Key

10600	$45.62

Cover Removal Key

10601	$45.62

** Appropriate hex keys included with switches.*

Pressure Supervisory Switch (Air, Nitrogen, Water) - *IPG SR020*

Adjustable Range (10-175 psi)

1/2" / DN50

Single SPDT	PS401A	$331.38
Dual SPDT	PS402A	$399.41

** Manufactured by Potter*

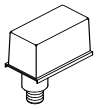

Cover Tamper Switch Kit

09601	$233.30

Explosion Proof

Pressure Adj Access Key

10600	$45.62

Cover Removal Key

10601	$45.62

** Appropriate hex keys included with switches.*

Flow Switch - *SR010*

Waterflow Indicators

(adjustable retard up to 120 sec. - 2 SPDT contacts)

Model VSR

1-2" / DN40	VSRF0100	$465.28
2" / DN50	VSRF0200	$497.44
2½" / DN65	VSRF0250	$497.44
3" / DN80	VSRF0300	$497.44
3½" / DN90	VSRF0350	$497.44
4" / DN100	VSRF0400	$497.44
5" / DN125	VSRF0500	$497.44
6" / DN150	VSRF0600	$497.44
8" / DN200	VSRF0800	$555.34

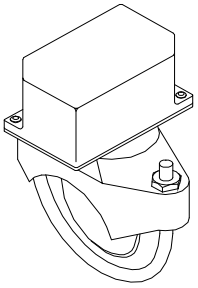

Water Motor Alarm and Accessories - *IPG V226*

Water Motor Alarm

Model F-2

07862	$1,036.72

Closure Plate

05820B	$211.59

Adjustable Shaft

(wall thickness up to 30-1/4 in / 768 mm)

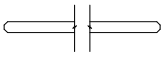

03312B	$203.02

Alarm Line Y Strainer

3/4 " (DN20)

01489A	$308.71

Extension Cup

05957B	$169.28

Special Valves and Trim

Halar® Coated Deluge / Preaction Valves (Model F-2)

Straight-Through (Model F-2)

IPG V233	1-1/2"	2"	2-1/2"	3"	4"	6"	8"
Thread X Thread	N/A	N/A	12402Q/B $10,224.50	N/A	N/A	N/A	N/A
Flange X Flange	N/A	N/A	N/A	12015Q/B $10,224.50	11960Q/B $13,679.53	11962Q/B $18,305.27	11992Q/B $38,320.90
Flange X Groove	N/A	N/A	N/A	12019Q/B $10,224.50	11959Q/B $13,679.53	11961Q/B $18,305.27	N/A
Groove X Groove	12127Q/B $7,575.28	12058Q/B $7,595.89	12404Q/B $10,224.50	12023Q/B $10,224.50	11514Q/B $13,679.53	11525Q/B $18,305.27	11118Q/B $36,469.67

HORIZONTAL TRIM - Conventional Deluge / Preaction Trim

Galvanized

IPG V236	1-1/2"	2"	2-1/2"	3"	4"	6"	8"
Loose Trim *(incl. accessory pkg-09316)*	14635-1 $5,329.24	14635-1 $5,329.24	14637-1 $5,215.35	14637-1 $5,215.35	14638-1 $5,457.32	14640-1 $5,470.13	14643-1 $7,923.71
Modular Trim *(incl. accessory pkg-09316)*	14635-1P $5,810.40	14635-1P $5,810.40	14637-1P $5,696.46	14637-1P $5,696.46	14638-1P $5,940.73	14640-1P $5,953.48	14643-1P $8,407.08

BRASS TRIMS - Conventional Deluge / Preaction Trim

Straight Through Valves - VERTICAL

IPG V237	1-1/2"	2"	2-1/2"	3"	4"	6"	8"
Loose Trim *(incl. accessory pkg-09316)*	14634-2 $9,045.81	14634-2 $9,045.81	14636-2 $8,591.23	14636-2 $8,591.23	14639-2 $9,179.82	14641-2 $9,285.78	14642-2 $11,570.21
Modular Trim *(incl. accessory pkg-09316)*	14634-2P $9,553.33	14634-2P $9,553.33	14636-2P $9,098.75	14636-2P $9,098.75	14639-2P $9,687.35	14641-2P $9,793.28	14642-2P P.O.A.

Straight Through Valves - HORIZONTAL

IPG V237	1-1/2"	2"	2-1/2"	3"	4"	6"	8"
Loose Trim *(incl. accessory pkg-09316)*	14635-2 $9,045.81	14635-2 $9,045.81	14637-2 $8,591.23	14637-2 $8,591.23	14638-2 $9,179.82	14640-2 $9,285.78	14643-2 $11,570.21
Modular Trim *(incl. accessory pkg-09316)*	14635-2P $9,553.33	14635-2P $9,553.33	14637-2P P.O.A.	14637-2P P.O.A.	14638-2P P.O.A.	14640-2P $9,793.28	14643-2P P.O.A.

Special Valves and Trim

DOMESTIC TRIM [1] - Model F - Galvanized

Straight Through Valves - VERTICAL

V236	1-1/2"	2"	2-1/2"	3"	4"	6"	8"
Loose Trim	14634-1USA	14634-1USA	14636-1USA	14636-1USA	14639-1USA	14641-1USA	14642-1USA
	$7,105.65	$7,105.65	$6,953.80	$6,953.80	$7,276.48	$7,293.49	$10,564.96

DOMESTIC TRIM - Easy Riser® System

Size	Trim (loose)	
IPG	V222	
Model K-1/L-1		
1-1/2"	12960USA	$541.16
2"	12960USA	$541.16
Model E-1/F-1		
2-1/2"	13776USA	$1,355.72
3"	13776USA	$1,355.72
4"	13777USA	$1,203.26
6"	13777USA	$1,203.26
8"	13777USA	$1,203.26

BRASS TRIM - Easy Riser® System

Size	Trim (loose)		Trim (modular)	
IPG	V222		V222	
Model K-1/L-1 - In-Line Check Valve Trim				
1-1/2"	12960-1	$640.48	12960-1P	P.O.A.
2"	12960-1	$640.48	12960-1P	P.O.A.
Model E-1/F-1 - Easy Riser Valve Trim				
2-1/2"	07236-1	$1,604.32	07236-1P	P.O.A.
3"	07236-1	$1,604.32	07236-1P	P.O.A.
4"	07237-1	$1,695.89	07237-1P	P.O.A.
6"	07237-1	$1,695.89	07237-1P	P.O.A.
8"	07237-1	$1,695.89	07237-1P	P.O.A.

BRASS - SureFire® TrimPac®

Single Interlocked	
V234	
13798D-1B	$15,660.93

Double Interlocked	
V234	
13799D-2B	$16,088.75

BRASS - Releasing Trims

	Pneumatic	Electric Pneumatic	Electric	Pneumatic Pneumatic	*DOMESTIC [1]* Electric
IPG	*V239*	*V239*	*V239*	*V239*	*V239*
Loose Trim *(releasing device not incl.)*	10811 $439.39	12661-2 $366.78	10832 $494.41	12662-2 $2,340.21	10832USA $659.20
Modular Trim *(releasing device not incl.)*	10811-P P.O.A.	12661-2P P.O.A.	10832-P P.O.A.	12662-2P P.O.A.	10832USA-P P.O.A.

(1) Meets sourcing requirements of the Buy American Act, American Reinvestment and Recovery Act, and the Buy American Law. Contact customer service for availability.