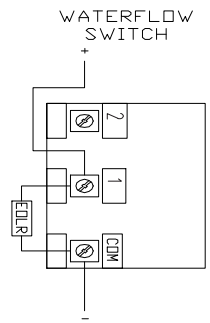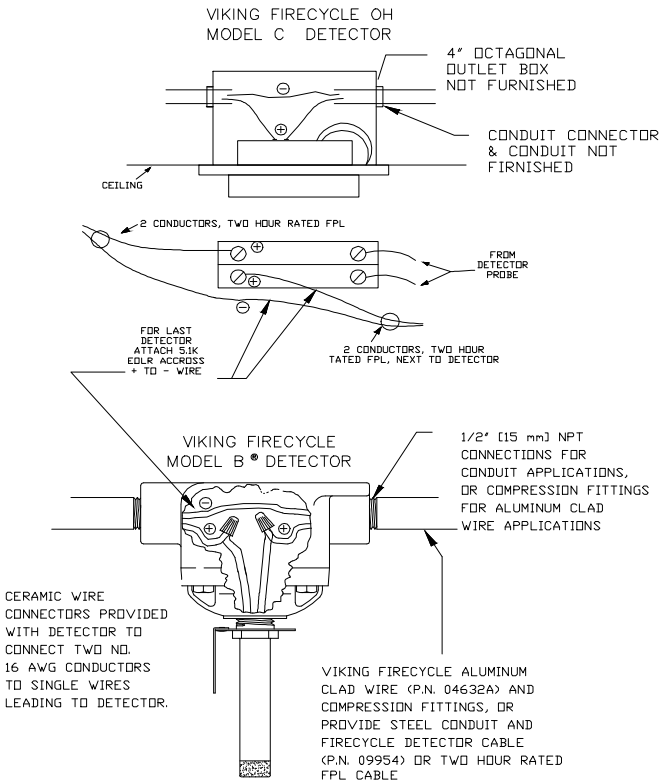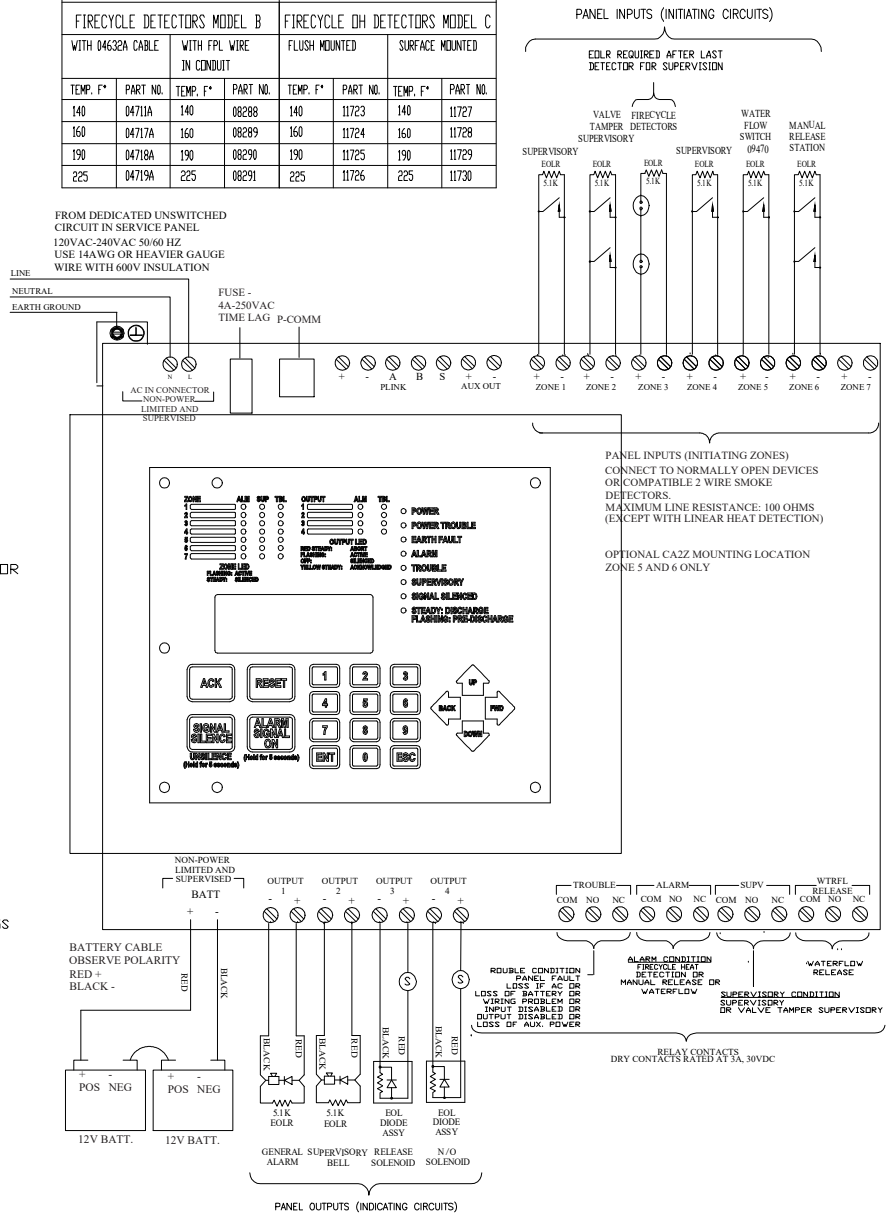EXTRA HAZARD APPLICATIONS				ORDINARY & LIGHT HAZARD APP.			
FIRECYCLE DETECTORS MODEL B				FIRECYCLE OH DETECTORS MODEL C			
WITH 04632A CABLE		WITH FPL WIRE IN CONDUIT		FLUSH MOUNTED		SURFACE MOUNTED	
TEMP. F°	PART NO.	TEMP. F°	PART NO.	TEMP. F°	PART NO.	TEMP. F°	PART NO.
140	04711A	140	08288	140	11723	140	11727
160	04717A	160	08289	160	11724	160	11728
190	04718A	190	08290	190	11725	190	11729
225	04719A	225	08291	225	11726	225	11730