VIKING	TECHNICAL DATA	STANDARD RESPONSE PENDENT SPRINKLER VK592 (K19.6) (CONTROL MODE SPECIFIC APPLICATION)

The Viking Corporation, 210 N Industrial Park Drive, Hastings MI 49058
Telephone: 269-945-9501 Technical Services: 877-384-5464 Fax: 269-818-1680 Email: techsvcs@vikingcorp.com
Visit the VIking website for the latest edition of this technical data page www.vikinggroupinc.com

1. DESCRIPTION

Viking Standard Response Control Mode Specific Application (CMSA) Pendent Sprinkler VK592 is a thermosensitive fusible element type spray sprinkler. With a 19.6 nominal K-Factor, the sprinkler provides greater flows at lower pressures than sprinklers with smaller K-Factors. This feature allows reduced pipe sizing for hydraulically calculated sprinkler systems, and provides the higher densities required to allow an increase in the hazard classification of an occupancy. Viking Standard Response Sprinkler VK592 was subjected to full-scale high piled storage fire testing and is UL Listed, FM Approved, and VdS Approved for use in protecting high-piled storage.

Viking Sprinkler VK592 is intended to protect Class I-IV commodities and plastic and rubber commodities (cartoned, unexpanded only) stored palletized, solid piled, bin boxes, shelf storage, and single, double, multiple row, and portable open rack storage (no open-top containers or solid shelves). Sprinkler VK592 may also be used to protect on-floor storage of idle wood pallets. Refer to Approval Chart 1 and Design Criteria on pages 3-4 for UL Listing requirements, and refer to Approval Chart 2 and Design Criteria on page 8 for FM Approval requirements that must be followed.

NOTE: Sprinkler VK592 is NOT approved for protecting expanded plastics, exposed unexpanded plastics, rolled paper, baled cotton, aerosols, or rubber tires.

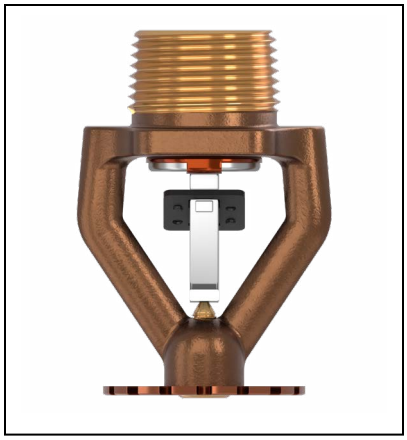

WARNING: Cancer and Reproductive Harm- www.P65Warnings.ca.gov

2. LISTINGS AND APPROVALS

UL Listed: Category VNIV

FM Approved: Class 2036

VdS Approved: Certificate G4080016

Refer to Approval Chart 1 and Design Criteria on pages 5-7 for UL Listing requirements, for the U.S. and Canada, and refer to Approval Chart 2 and Design Criteria on page 11 for FM Approval requirements that must be followed.

Deviation from the standards or any alteration to the sprinkler after it leaves the factory including, but not limited to: painting, plating, coating, or modification, may render the sprinkler inoperative and will automatically nullify the approval and any guarantee made by The Viking Corporation.

3. TECHNICAL DATA

Specifications:
Available since 2008.
Maximum Working Pressure: 175 psi (12 bar). Factory tested hydrostatically to 500 psi (34.5 bar).
Thread size: Base Part No. 14243: 1” NPT, Part No. 15468: 25 mm BSPT
Nominal K-Factor: 19.6 U.S. (282.6 metric*)

* Metric K-factor measurement shown is when pressure is measured in Bar. When pressure is measured in kPa, divide the metric K-factor shown by 10.0.

Overall Length: 3-3/16” (81 mm)

Material Standards:
Sprinkler Frame: Brass UNS-C84400 or CW602N
Deflector: Phosphor Bronze UNS-C51000
Seat and Insert Assembly: Copper UNS-C11000 and Stainless Steel UNS-S30400
Compression Screw: Stainless Steel UNS-S31603
Belleville Spring Sealing Assembly: Nickel Alloy, coated on both sides with Teflon Tape
Trigger and Support: Stainless Steel UNS-S31600
Fusible Element Assembly: Phosphor Bronze UNS-C51000, polyurethane coated

VIKING	TECHNICAL DATA	**STANDARD RESPONSE PENDENT SPRINKLER VK592 (K19.6)** (CONTROL MODE SPECIFIC APPLICATION)

The Viking Corporation, 210 N Industrial Park Drive, Hastings MI 49058
Telephone: 269-945-9501 Technical Services: 877-384-5464 Fax: 269-818-1680 Email: techsvcs@vikingcorp.com
Visit the VIking website for the latest edition of this technical data page www.vikinggroupinc.com

NOTICE: DO NOT DISASSEMBLE SPRINKLER

Image is not to scale.

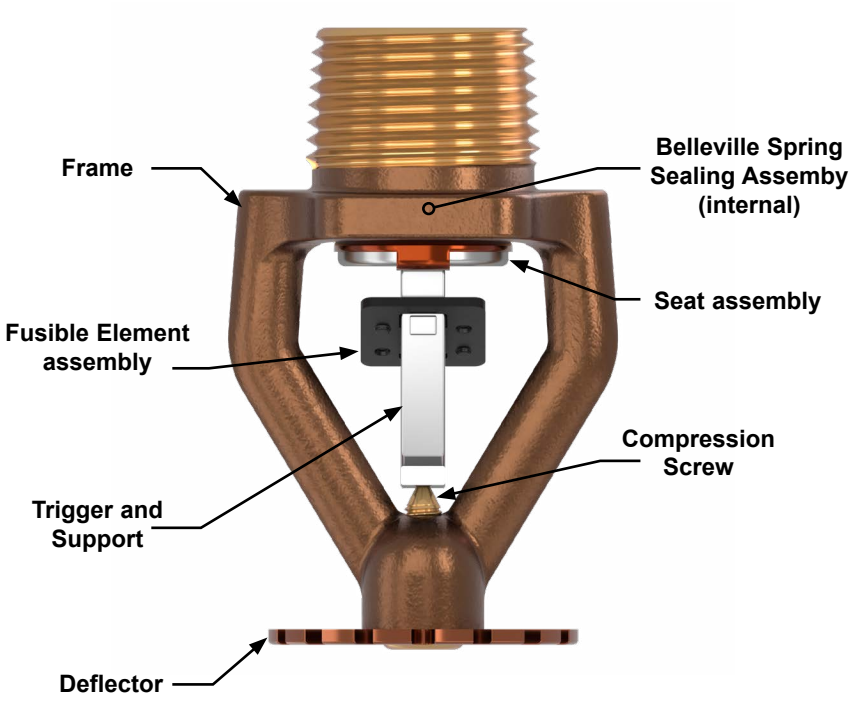

Figure 1:
Sprinkler Components

VIKING	TECHNICAL DATA	STANDARD RESPONSE PENDENT SPRINKLER VK592 (K19.6) (CONTROL MODE SPECIFIC APPLICATION)

The Viking Corporation, 210 N Industrial Park Drive, Hastings MI 49058
Telephone: 269-945-9501 Technical Services: 877-384-5464 Fax: 269-818-1680 Email: techsvcs@vikingcorp.com
Visit the VIking website for the latest edition of this technical data page www.vikinggroupinc.com

Ordering Instructions

1. Choose a sprinkler base part number with the required thread size and listing or approval (refer to the approval chart).
2. Add the suffix for the desired finish.
3. Add the suffix for the desired temperature rating.

EXAMPLE: 14243AC = VK592 with brass finish and 165 °F (74 °C) nominal temperature rating. This sprinkler is to be installed into an area with a maximum ambient temperature of 100 °F (38 °C).

NOTE: *The "TQ" suffix for the part numbers below indicates a special protective cap (Figure 2-B) intended for use with InstaSeal® fittings. When ordering sprinklers with TQ suffixes in combination with InstaSeal® fittings, refer to Form No. F_021223 for installation instructions.*

Sprinkler Base Part Number	
Part Number	**Thread Size**
14243	1" NPT
14243XX-TQ	1" NPT
15468	25 mm BSPT
15468XX-TQ	25 mm BSPT

Finish	
Description	**Suffix**
Brass	A

Temperature Ratings			
Temperature Rating	**Frame Color**	**Maximum Ambient Ceiling Temperature**	**Suffix**
165 °F (74 °C)	None	100 °F (38 °C)	C
205 °F (96 °C)	White	150 °F (66 °C)	E

*** Where "XX" is shown in the base part number, enter the desired suffixes for Finish and Temperature Rating (EXAMPLE: 14243AE-TQ)**

Accessories
Sprinkler wrench: 13635W/B (Use side B)
Sprinkler wrench: 26519M/B (Use Side B)

VIKING	TECHNICAL DATA	**STANDARD RESPONSE PENDENT SPRINKLER VK592 (K19.6)** (CONTROL MODE SPECIFIC APPLICATION)

The Viking Corporation, 210 N Industrial Park Drive, Hastings MI 49058
Telephone: 269-945-9501 Technical Services: 877-384-5464 Fax: 269-818-1680 Email: techsvcs@vikingcorp.com
Visit the VIking website for the latest edition of this technical data page www.vikinggroupinc.com

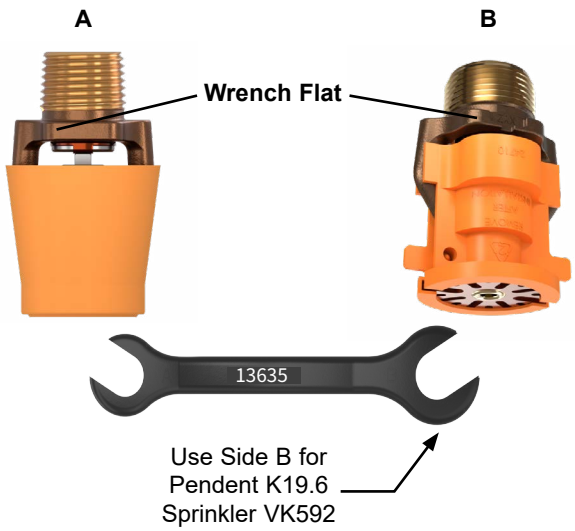

Figure 2:
Sprinkler Wrench

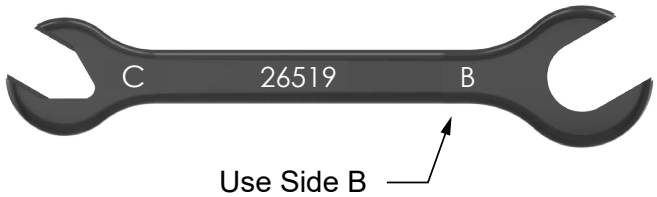

Figure 3:
Sprinkler Wrench 26519M/B

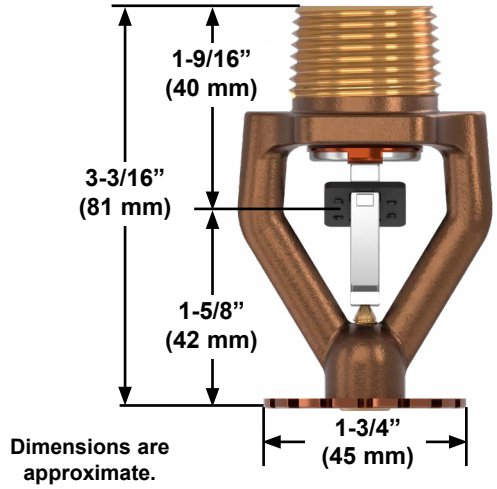

Figure 4:
Sprinkler VK592 Dimensions

The Viking Corporation, 210 N Industrial Park Drive, Hastings MI 49058
Telephone: 269-945-9501 Technical Services: 877-384-5464 Fax: 269-818-1680 Email: techsvcs@vikingcorp.com
Visit the VIking website for the latest edition of this technical data page www.vikinggroupinc.com

4. INSTALLATION

NOTICES

Risk of mechanical damage.

- **Installing sprinklers into piping that is not in place can cause permanent damage. Prior to installing any sprinklers, verify that the piping is in place and properly supported.**
- **Using a tool other than the approved wrench specified in this document can cause permanent damage to the unit. Use ONLY the designated sprinkler wrench.**
- **Take care not to damage the sprinkler operating parts.**
- **DO NOT use the sprinkler deflector or fusible link element to start or thread the sprinkler into a fitting.**
- **DO NOT exeed 30 ft.lbs. of torque (hand tight, plus approximately 2 full turns with the wrench) to install these sprinklers. Higher levels of torque may distort the sprinkler inlet with consequent leakage or impairment of the sprinkler.**
- **If the sprinkler will be installed into an InstaSeal® IS-W2 fitting, refer to Form No. F_021223.**

4.1 Installation Instructions

1. With the sprinkler contained in the plastic protective cap, apply a small amount of pipe-joint compound or tape to the male threads only, while taking care not to allow a build-up of compound in the sprinkler orifice.
2. With the sprinkler contained in the protective cap, install the sprinkler onto the piping by applying the sprinkler wrench to the sprinkler wrench flats.
3. Refer to section “5.2 After Sprinkler Installation”.

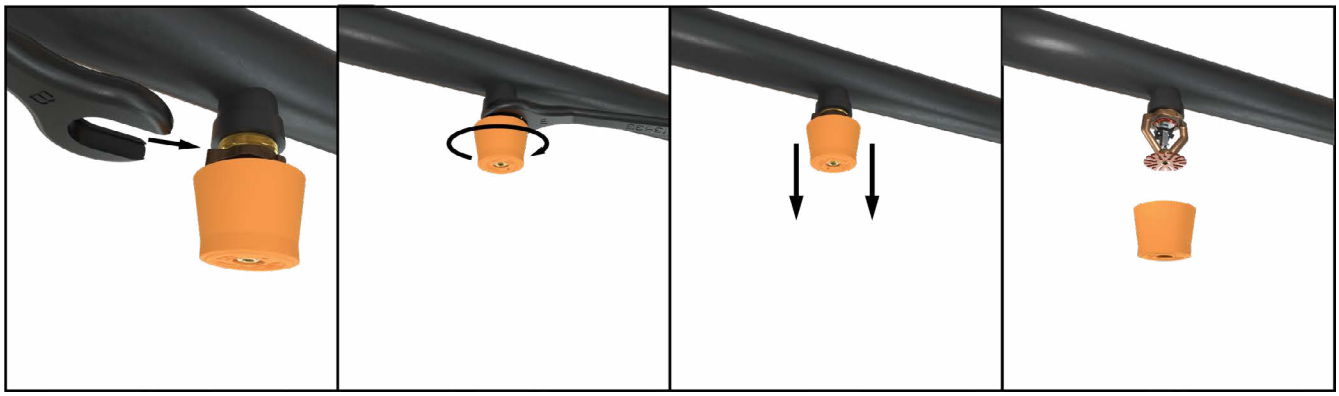

Figure 5:
Sprinkler Installation

4.2 After Sprinkler Installation

1. After installation, the entire sprinkler system must be tested. The test must be conducted to comply with the Installation Standards. Make sure the sprinkler has been properly tightened. If a thread leak occurs, normally the unit must be removed, new pipe-joint compound or tape applied, and then reinstalled. This is due to the fact that when the joint seal is damaged, the sealing compound or tape is washed out of the joint. Immediately replace any damaged units, using the special sprinkler wrench only.
2. After installation and testing and repairing of all leaks, remove the protective caps from the sprinklers.
   ***NOTICE:* When removing caps, use care to prevent dislodging or damaging sprinkler fusible element.**
   - **Do NOT use any type of tool to remove the cap.**
   - **Remove the cap by hand.**
   - **THE CAPS MUST BE REMOVED FROM SPRINKLERS BEFORE PLACING THE SYSTEM IN SERVICE.**

The Viking Corporation, 210 N Industrial Park Drive, Hastings MI 49058
Telephone: 269-945-9501 Technical Services: 877-384-5464 Fax: 269-818-1680 Email: techsvcs@vikingcorp.com
Visit the VIking website for the latest edition of this technical data page www.vikinggroupinc.com

5. OPERATION

During fire conditions, the heat-sensitive fusible element assembly disengages, releasing the seat and spring assemblies to open the waterway. Water flowing through the sprinkler orifice strikes the sprinkler deflector, forming a uniform spray pattern to extinguish or control the fire.

6. INSPECTIONS, TESTS AND MAINTENANCE

Refer to NFPA 25 for Inspection, Testing and Maintenance requirements.

7. AVAILABILITY

The Viking Model VK592 Sprinkler is available through a network of domestic and international distributors. See The Viking Corporation web site for the closest distributor or contact The Viking Corporation.

8. GUARANTEE

For details of warranty, refer to Viking's current list price schedule or contact Viking directly.

Approval Chart 1 (UL)

KEY: Temperature, Finish, Escutcheon (if applicable) — A1X

Standard Response Control Mode Specific Application (CMSA) Pendent Sprinkler VK592 (K19.6)
Maximum 175 PSI (12 Bar) WWP

Base Part Number[1]	SIN	Thread Size	Nominal K-factor		Overall Length		Listings and Approvals[3] (Refer also to Design Criteria below and on page 4.)	
			U.S.	metric[2]	Inches	mm	UL	VdS
14243	VK592	1" NPT	19.6	282.6	3-3/16	81	A1	B1
14243XX-TQ	VK592	1" NPT	19.6	282.6	3-3/16	81	A1	B1
15468	VK592	25 mm BSPT	19.6	282.6	3-3/16	81	A1	B1
15468XX-TQ	VK592	25 mm BSPT	19.6	282.6	3-3/16	81	A1	B1

Approved Temperature Ratings	Approved Finish
A - 160 °F (71 °C) and 205 °F (96 °C) B - 160 °F (71 °C)	1 - Brass

1. Base part number shown. For complete part number, refer to Viking's current price schedule.
2. Metric K-factor measurement shown is when pressure is measured in Bar. When pressure is measured in kPa, divide the metric K-factor shown by 10.0.
3. This table shows the listings and approvals available at the time of printing. Other approvals may be in process.

VIKING	TECHNICAL DATA	STANDARD RESPONSE PENDENT SPRINKLER VK592 (K19.6) (CONTROL MODE SPECIFIC APPLICATION)

The Viking Corporation, 210 N Industrial Park Drive, Hastings MI 49058
Telephone: 269-945-9501 Technical Services: 877-384-5464 Fax: 269-818-1680 Email: techsvcs@vikingcorp.com
Visit the VIking website for the latest edition of this technical data page www.vikinggroupinc.com

DESIGN CRITERIA - UL

(Also refer to Approval Chart 1 above.)

UL Listing Requirements: (**NOTE: The FM Approval requirements differ from UL and/or NFPA criteria. Refer to page 8 for FM requirements.)**

Design Criteria: Sprinkler VK592 is UL Listed for use in the U.S. and Canada for High Piled Storage Occupancies with the minimum operating pressures as indicated in Tables 3-9 on pages 5-6.

Hydraulic Calculations: Hydraulic calculations must be done in accordance with NFPA 13 for Control Mode Specific Application (CMSA) sprinklers.

System Type: Wet systems only.

Maximum Roof or Ceiling Slope: Refer to NFPA 13 for slope requirements.

Sprinkler Position: Approved for use only in the pendent position. Align the deflector parallel with the ceiling or roof.

Clearance from Deflector to Top of Storage: At least 36" (914 mm).

Determination of the Protection Area of Coverage: The protection area of coverage per sprinkler (A_s) is determined as follows: $A_s = S \times L$

To determine S, measure the distance between sprinklers (or to wall or obstruction in the case of the end sprinkler on the branch line) upstream and downstream along the branch line. Choose the larger of either twice the distance to the wall (or obstruction) or the distance to the next sprinkler. This dimension is S.

To determine L, measure the perpendicular distance to the sprinkler on the adjacent branch line (or to a wall or obstruction in the case of the last branch line) on each side of the branch line on which the subject sprinkler is positioned. Choose the larger of either twice the distance to the wall (or obstruction) or the distance to the next sprinkler. This dimension is L.

Maximum Protection Area of Coverage: The maximum allowable protection area of coverage for a sprinkler (A_s) shall be 100 ft^2 (9.3 m^2), as indicated in Table 2. Deviations from the maximum sprinkler spacing are allowed to eliminate obstructions created by structural elements (such as trusses, bar joists, and wind bracing) by moving either a sprinkler or a branch line as follows:

1. Moving a sprinkler along the branch line a maximum of 1 ft (0.3 m) from its allowable spacing, provided coverage for that sprinkler does not exceed 110 ft^2 (10.2 m^2) per sprinkler where all of the following conditions are met:
   - The average actual floor area protected by the moved sprinkler and the adjacent sprinklers does not exceed 100 ft^2 (9.3 m^2).
   - Adjacent branch lines maintain the same pattern.
   - The distance between sprinklers doesn't exceed 12 ft (3.7 m).
2. Moving a single branch line a maximum of 1 ft (0.3 m) from its allowable spacing, provided coverage for the sprinklers on that branch line and the sprinklers on the branch line it is moving away from does not exceed 110 ft^2 (10.2 m^2) per sprinkler where all of the following conditions are met:
   - The average actual floor area protected by the sprinklers on the moved branch line and the sprinklers on the adjacent branch lines does not exceed 100 ft^2 (9.3 m^2) per sprinkler.
   - The distance between sprinklers doesn't exceed 12 ft (3.7 m).
   - It is NOT permitted to move a branch line where there are moved sprinklers on a branch line that exceed the maximum sprinkler spacing.

Minimum Protection Area of Coverage: The minimum allowable protection area of coverage per sprinkler (A_s) is 64 ft^2 (5.9 m^2).

Maximum Distance Between Sprinklers: The maximum distance between sprinklers shall be limited to not more than 12 ft (3.7 m), as shown in Table 2.

1. Deviations from the maximum sprinkler spacing are allowed to eliminate obstructions created by trusses and bar joists by moving a sprinkler along the branch line a maximum of 1 ft (0.3 m) from its allowable spacing, provided coverage for that sprinkler does not exceed 110 ft^2 (10.2 m^2) where ALL of the following conditions are met:
   - The average actual floor area protected by the sprinklers on the moved branch line and the sprinklers on the adjacent branch lines doesn't exceed 100 ft^2 (9.3 m^2) per sprinkler.
   - The distance between sprinklers doesn't exceed 12 ft (3.7 m).
   - It is NOT permitted to move a branch line where there are moved sprinklers on a branch line that exceed the maximum sprinkler spacing.

Minimum Protection Area of Coverage: The minimum allowable protection area of coverage per sprinkler (A_s) is 64 ft^2 (5.9 m^2).

Maximum Distance Between Sprinklers: The maximum distance between sprinklers shall be limited to not more than 12 ft (3.7 m), as shown in Table 2.

1. Deviations from the maximum sprinkler spacing are allowed to eliminate obstructions created by trusses and bar joists by moving a sprinkler along the branch line a maximum of 1 ft (0.3 m) from its allowable spacing, provided coverage for that sprinkler does not exceed 110 ft^2 (10.2 m^2) where ALL of the following conditions are met:
   - The average actual floor area protected by the sprinklers on the moved branch line and the sprinklers on the adjacent branch lines doesn't exceed 100 ft^2 (9.3 m^2) per sprinkler.
   - The distance between sprinklers doesn't exceed 12 ft (3.7 m).
   - It is permitted to move a branch line where there are moved sprinklers on a branch line that exceed the maximum sprinkler spacing.
2. Where branch lines are parallel to trusses and bar joists, deviations from the maximum sprinkler spacing are allowed to eliminate obstructions created by trusses and bar joists by moving a single branch line a maximum of 1 ft (0.3 m) from its allowable spacing, provided coverage for the sprinklers on that branch line and the sprinklers on the branch line it is moving away from does not exceed 110 ft^2 (10.2 m^2) per sprinkler where all of the following conditions are met:
   - The average actual floor area protected by the sprinklers on the moved branch line and the sprinklers on the adjacent branch lines does not exceed 100 ft^2 (9.3 m^2) per sprinkler.
   - The distance between sprinklers doesn't exceed 12 ft (3.7 m).
   - It is NOT permitted to move a branch line where there are moved sprinklers on a branch line that exceed the maximum sprinkler spacing.

The Viking Corporation, 210 N Industrial Park Drive, Hastings MI 49058
Telephone: 269-945-9501 Technical Services: 877-384-5464 Fax: 269-818-1680 Email: techsvcs@vikingcorp.com
Visit the VIking website for the latest edition of this technical data page www.vikinggroupinc.com

UL Listing Requirements (continued):

Minimum Distance Between Sprinklers: 8 ft (2.4 m) on center.

Minimum Distance from Walls: At least 4” (102 mm) from walls.

Maximum Distance from Walls: No more than one-half the allowable distance permitted between sprinklers, as indicated in Table 2.

Deflector Position:

- Under unobstructed construction, the deflector must be located between 6” (152 mm) and 12” (305 mm) below the ceiling.
- Under obstructed noncombustible construction, the deflector must be located in accordance with one of the following:
  1. With the deflector between 6” (152 mm) and 12” (305 mm) below the ceiling.
  2. With the deflector of sprinklers under concrete tee construction with stems spaced less than 7-1/2 ft (2.3 m) but more than 3 ft (0.9 m) on centers, regardless of the depth of the tee, located at or above a horizontal plane 1” (25.4 mm) below the bottom of the stems of the tees and shall comply with Table 10.

Obstructions at or Near the Ceiling: Sprinklers must be arranged to comply with Table 10 and Figure 3 on page 7 for obstructions at or near the ceiling, such as beams, ducts, lights, and top chords of trusses and bar joists. This requirement doesn’t apply where sprinklers are spaced on opposite sides of obstructions less than 24” (610 mm) wide, provided the distance from the centerline on the obstructions to the sprinklers doesn’t exceed one half the allowable distance between sprinklers.

Isolated Obstructions Below the Elevation of Sprinklers: Sprinklers must be arranged with respect to isolated obstructions in accordance with one of the following:

1. Sprinklers must be installed below isolated noncontinuous obstructions that restrict only one sprinkler and are located below the elevation of sprinklers such as light fixtures and unit heaters.
2. Additional sprinklers are not required where the obstruction is 2 ft (0.6 m) or less in width and the sprinkler is located horizontally 4” (102 mm) or more from the nearest edge of the obstruction.
3. Additional sprinklers are not required where sprinklers are positioned with respect to the bottom of obstructions in accordance with Table 10 and Figure 3 on page 7.
4. Additional sprinklers are not required where the obstruction is 4” (102 mm) or less in width and in compliance with Figure 4, which illustrates sprinklers shall be positioned such that they are located at least a distance three times greater than the maximum dimension of the obstruction from the sprinkler, but never closer than 4” (102 mm) horizontally.

Continuous Obstructions Below the Sprinklers: Sprinklers must be arranged with respect to obstructions in accordance with one of the following:

1. Sprinklers must be installed below continuous obstructions, or they must be arranged to comply with Table 10 and Figure 3 on page 7 for horizontal obstructions entirely below the elevation of sprinklers that restrict sprinkler discharge pattern for two or more adjacent sprinklers, such as ducts, lights, pipes, and conveyors.
2. Additional sprinklers shall not be required where the obstruction is 4” (102 mm) or less in width and installed in accordance with Figure 4.
3. Additional sprinklers are not required where the obstruction is 1 ft (0.3 m) or less in width and located at least 1 ft (0.3 m) horizontally from the sprinkler.
4. Additional sprinklers are not required where the obstruction is 2 ft (0.6 m) or less in width and located a minimum of 2 ft (0.6 m) horizontally from the sprinkler.
5. Ceiling sprinklers are not required to comply with Table 10 where a row of sprinklers is installed under the obstruction.

Bottom Chords of Bar Joists or Open Trusses: Sprinklers shall be positioned a minimum of 4” (102 mm) horizontally from the nearest edge to any bottom chord of a bar joist or open truss.

Open Gratings: Sprinklers installed under open gratings must be of the intermediate level/rack storage type or otherwise shielded from the discharge of overhead sprinklers.

Overhead Doors: Quick response spray sprinklers are permitted to be utilized under overhead doors.

The Viking Corporation, 210 N Industrial Park Drive, Hastings MI 49058
Telephone: 269-945-9501 Technical Services: 877-384-5464 Fax: 269-818-1680 Email: techsvcs@vikingcorp.com
Visit the VIking website for the latest edition of this technical data page www.vikinggroupinc.com

TABLE 3: UL-PROTECTION AREAS AND MAXIMUM SPACING OF VK592 SPRINKLERS

Construction Type	Ceiling/Roof Heights up to 40 ft (12.2 m)			
	Protection Area		Spacing	
Noncombustible unobstructed	100 ft²	(9.3 m²)	12 ft	(3.7 m)
Noncombustible obstructed	100 ft²	(9.3 m²)	12 ft	(3.7 m)
Combustible unobstructed	100 ft²	(9.3 m²)	12 ft	(3.7 m)
Combustible obstructed	N/A	N/A	N/A	N/A
Rack storage applications	100 ft²	(9.3 m²)	12 ft	(3.7 m)

TABLE 4: UL DESIGN CRITERIA - PALLETIZED AND SOLID-PILED STORAGE OF CLASS I-IV COMMODITIES USING CONTROL MODE SPECIFIC APPLICATION PENDENT SPRINKLER VK592

Configuration	Commodity Class	Maximum Storage Height		Maximum Ceiling/ Roof Height		Number of Design Sprinklers	Minimum Operating Pressure	
Palletized and Solid Piled	Classes I-IV	25 ft	(7.6 m)	30 ft	(9.1 m)	15	16 PSI	(1.1 bar)
		30 ft	(9.1 m)	35 ft	(10.5 m)	15	25 PSI	(1.7 bar)
		35 ft	(10.5 m)	40 ft	(12.2 m)	15	30 PSI	(2.1 bar)

NOTE: Hose stream allowance shall be in accordance with NFPA 13 for Control Mode Specific Application Sprinklers.

TABLE 5: UL DESIGN CRITERIA - PALLETIZED AND SOLID-PILED STORAGE OF PLASTIC AND RUBBER COMMODITIES USING CONTROL MODE SPECIFIC APPLICATION PENDENT SPRINKLER VK592

Configuration	Commodity Class	Maximum Storage Height		Maximum Ceiling/ Roof Height		Number of Design Sprinklers	Minimum Operating Pressure	
Palletized and Solid Piled Storage (no open-top containers or solid shelves)	Cartoned Unexpanded Plastics	20 ft	(6.1 m)	25 ft	(7.6 m)	15	16 PSI	(1.1 bar)
		20 ft	(6.1 m)	30 ft	(9.1 m)	15	16 PSI	(1.1 bar)
		20 ft	(6.1 m)	35 ft	(10.5 m)	15	25 PSI	(1.7 bar)
		20 ft	(6.1 m)	40 ft	(12.2 m)	15	30 PSI	(2.1 bar)
		25 ft	(7.6 m)	30 ft	(9.1 m)	15	16 PSI	(1.1 bar)
		25 ft	(7.6 m)	35 ft	(10.5 m)	15	25 PSI	(1.7 bar)
		25 ft	(7.6 m)	40 ft	(12.2 m)	15	30 PSI	(2.1 bar)
		30 ft	(9.1 m)	35 ft	(10.5 m)	15	25 PSI	(1.7 bar)
		30 ft	(9.1 m)	40 ft	(12.2 m)	15	30 PSI	(2.1 bar)
		35 ft	(10.5 m)	40 ft	(12.2 m)	15	30 PSI	(2.1 bar)

NOTE: Hose stream allowance shall be in accordance. with NFPA 13 for Control Mode Specific Application Sprinklers.

TABLE 6: UL DESIGN CRITERIA - SINGLE-, DOUBLE-, AND MULTIPLE-ROW RACK STORAGE (WITHOUT SOLID SHELVES) OF CLASS I-IV COMMODITIES STORED UP TO AND INCLUDING 25 ft (7.6 m) HIGH USING CONTROL MODE SPECIFIC APPLICATION PENDENT SPRINKLER VK592

Configuration	Commodity Class	Maximum Storage Height		Maximum Ceiling/ Roof Height		Number of Design Sprinklers	Minimum Operating Pressure	
Single-Row, Double-Row, and Multiple-Row Rack (no open-top containers)	Classes I-IV Encapsulated or Unencapsulated	20 ft	(6.1 m)	25 ft	(7.6 m)	15	16 PSI	(1.1 bar)
		20 ft	(6.1 m)	30 ft	(9.1 m)	15	16 PSI	(1.1 bar)
		20 ft	(6.1 m)	35 ft	(10.5 m)	15	25 PSI	(1.7 bar)
		20 ft	(6.1 m)	40 ft	(12.2 m)	15	30 PSI	(2.1 bar)
		25 ft	(7.6 m)	30 ft	(9.1 m)	15	16 PSI	(1.1 bar)
		25 ft	(7.6 m)	35 ft	(10.5 m)	15	25 PSI	(1.7 bar)
		25 ft	(7.6 m)	40 ft	(12.2 m)	15	30 PSI	(2.1 bar)

NOTE: Hose stream allowance shall be in accordance with NFPA 13 for Control Mode Specific Application Sprinklers.

VIKING	TECHNICAL DATA	STANDARD RESPONSE PENDENT SPRINKLER VK592 (K19.6) (CONTROL MODE SPECIFIC APPLICATION)

The Viking Corporation, 210 N Industrial Park Drive, Hastings MI 49058
Telephone: 269-945-9501 Technical Services: 877-384-5464 Fax: 269-818-1680 Email: techsvcs@vikingcorp.com
Visit the VIking website for the latest edition of this technical data page www.vikinggroupinc.com

TABLE 7: UL DESIGN CRITERIA - SINGLE-, DOUBLE-, AND MULTIPLE-ROW RACK STORAGE (WITHOUT SOLID SHELVES) OF CLASS I-IV COMMODITIES STORED OVER 25 ft (7.6 m) HIGH USING CONTROL MODE SPECIFIC APPLICATION PENDENT SPRINKLER VK592

Configuration	Commodity Class	Maximum Storage Height		Maximum Ceiling/ Roof Height		Number of Design Sprinklers	Minimum Operating Pressure	
Single-Row, Double-Row, and Multiple-Row Rack (no open-top containers)	Classes I-IV Encapsulated or Unencapsulated	30 ft	(9.1 m)	35 ft	(10.5 m)	15	25 PSI	(1.7 bar)
		30 ft	(9.1 m)	40 ft	(12.2 m)	15	30 PSI	(2.1 bar)
		35 ft	(10.5 m)	40 ft	(12.2 m)	15	30 PSI	(2.1 bar)

NOTE: Hose stream allowance shall be in accordance with NFPA 13 for Control Mode Specific Application Sprinklers.

TABLE 8: UL DESIGN CRITERIA - SINGLE-, DOUBLE-, AND MULTIPLE-ROW RACK STORAGE (WITHOUT SOLID SHELVES) OF PLASTIC COMMODITIES STORED UP TO AND INCLUDING 25 ft (7.6 m) HIGH USING CONTROL MODE SPECIFIC APPLICATION PENDENT SPRINKLER VK592

Configuration	Commodity Class	Maximum Storage Height		Maximum Ceiling/ Roof Height		Number of Design Sprinklers	Minimum Operating Pressure	
Single-Row, Double-Row, and Multiple-Row Rack (no open-top containers)	Cartoned Unexpanded Plastics	20 ft	(6.1 m)	25 ft	(7.6 m)	15	16 PSI	(1.1 bar)
		20 ft	(6.1 m)	30 ft	(9.1 m)	15	16 PSI	(1.1 bar)
		20 ft	(6.1 m)	35 ft	(10.5 m)	15	25 PSI	(1.7 bar)
		20 ft	(6.1 m)	40 ft	(12.2 m)	15	30 PSI	(2.1 bar)
		25 ft	(7.6 m)	30 ft	(9.1 m)	15	16 PSI	(1.1 bar)
		25 ft	(7.6 m)	35 ft	(10.5 m)	15	25 PSI	(1.7 bar)
		25 ft	(7.6 m)	40 ft	(12.2 m)	15	30 PSI	(2.1 bar)

NOTE: Hose stream allowance shall be in accordance with NFPA 13 for Control Mode Specific Application Sprinklers.

TABLE 9: UL DESIGN CRITERIA - SINGLE-, DOUBLE-, AND MULTIPLE-ROW RACK STORAGE (WITHOUT SOLID SHELVES) OF PLASTIC COMMODITIES STORED OVER 25 ft (7.6 m) HIGH USING CONTROL MODE SPECIFIC APPLICATION PENDENT SPRINKLER VK592

Configuration	Commodity Class	Maximum Storage Height		Maximum Ceiling/ Roof Height		Number of Design Sprinklers	Minimum Operating Pressure	
Single-Row, Double-Row, and Multiple-Row Rack (no open-top containers)	Cartoned Unexpanded Plastics	30 ft	(9.1 m)	35 ft	(10.5 m)	15	25 PSI	(1.7 bar)
		30 ft	(9.1 m)	40 ft	(12.2 m)	15	30 PSI	(2.1 bar)
		35 ft	(10.5 m)	40 ft	(12.2 m)	15	30 PSI	(2.1 bar)

NOTE: Hose stream allowance shall be in accordance with NFPA 13 for Control Mode Specific Application Sprinklers.

TABLE 10: UL DESIGN CRITERIA - ON FLOOR STORAGE OF IDLE WOOD PALLETS STORED UP TO AND INCLUDING 20 ft (7.6 m) HIGH USING CONTROL MODE SPECIFIC APPLICATION PENDENT SPRINKLER VK592

Configuration	Commodity Class	Maximum Storage Height		Maximum Ceiling/ Roof Height		Number of Design Sprinklers	Minimum Operating Pressure	
On Floor	Idle Wood Pallets	20 ft	(6.1 m)	25 ft	(7.6 m)	15	16 PSI	(1.1 bar)
		20 ft	(6.1 m)	30 ft	(9.1 m)	15	16 PSI	(1.1 bar)
		20 ft	(6.1 m)	35 ft	(10.5 m)	15	25 PSI	(1.7 bar)
		20 ft	(6.1 m)	40 ft	(12.2 m)	15	30 PSI	(2.1 bar)

NOTE: Hose stream allowance shall be in accordance with NFPA 13 for Control Mode Specific Application Sprinklers.

The Viking Corporation, 210 N Industrial Park Drive, Hastings MI 49058
Telephone: 269-945-9501 Technical Services: 877-384-5464 Fax: 269-818-1680 Email: techsvcs@vikingcorp.com
Visit the VIking website for the latest edition of this technical data page www.vikinggroupinc.com

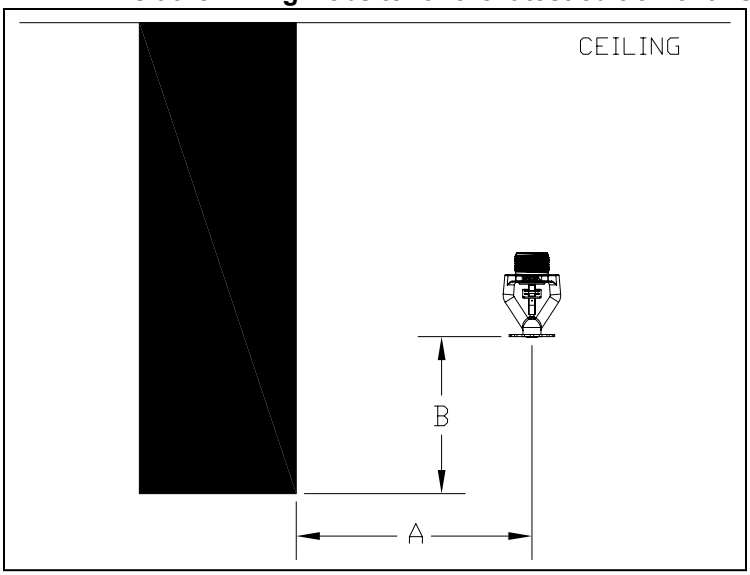

Figure 3:
Positioning of Sprinklers to Avoid Obstructions to Discharge

TABLE 11: POSITIONING SPRINKLER VK592 TO AVOID OBSTRUCTIONS TO DISCHARGE-UL ONLY

Distance from Sprinkler to Side of Obstruction (A)		Maximum Allowable Distance of Deflector Above Bottom of Obstruction (B)	
U.S.	metric	inches	mm
Less than 1 ft	Less than .3048 m	0	0
1 ft to less than 1 ft 6 in.	.3048 m to less than .46 m	1-1/2”	38.1 mm
1 ft 6 in. to less than 2 ft	.46 m to less than .61 m	3”	76.2 mm
2 ft to less than 2 ft 6 in.	.61 m to less than .76 m	5-1/2”	139.7 mm
2 ft 6 in. to less than 3 ft	.76 m to less than .91 m	8”	203.2 mm
3 ft to less than 3 ft 6 in.	.91 m to less than 1.07 m	10”	254 mm
3 ft 6 in to less than 4 ft.	1.07 m to less than 1.22 m	12”	304.8 mm
4 ft to less than 4 ft 6 in.	1.22 m to less than 1.37 m	15”	381 mm
4 ft 6 in. to less than 5 ft	1.37 m to less than 1.52 m	18”	457.2 mm
5 ft to less than 5 ft 6 in.	1.52 m to less than 1.7 m	22”	558.8 mm
5 ft 6 in. to less than 6 ft	1.7 m to less than 1.83 m	26”	660.4 mm
6 ft	1.83 m	31”	787.4 mm

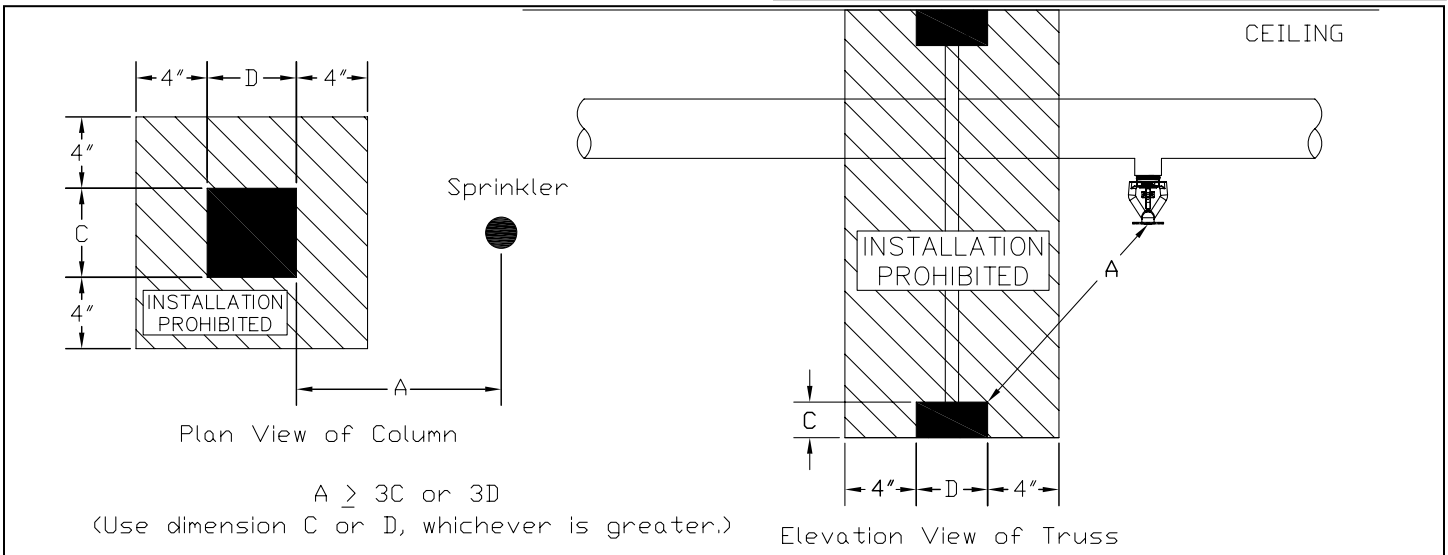

Figure 4: **Minimum Distance from Obstructions-UL Only**

VIKING	TECHNICAL DATA	STANDARD RESPONSE PENDENT SPRINKLER VK592 (K19.6) (CONTROL MODE SPECIFIC APPLICATION)

The Viking Corporation, 210 N Industrial Park Drive, Hastings MI 49058
Telephone: 269-945-9501 Technical Services: 877-384-5464 Fax: 269-818-1680 Email: techsvcs@vikingcorp.com
Visit the VIking website for the latest edition of this technical data page www.vikinggroupinc.com

Approval Chart 2 (FM)

Standard Response Pendent Sprinkler VK592 (K19.6)
Maximum 175 PSI (12 Bar) WWP

KEY: Temperature, Finish, Escutcheon (if applicable) — A1X

Base Part Number[1]	SIN	Thread Size	Nominal K-Factor		Overall Length		FM Approvals[3,4] (Refer also to Design Criteria below.)
			U.S.	metric[2]	Inches	mm	
14243	VK592	1” NPT	19.6	282.6	3-3/16	81	A1
15468	VK592	25 mm BSP	19.6	282.6	3-3/16	81	A1

Approved Temperature Ratings	Approved Finish
A - 160 °F (71 °C) and 205 °F (96 °C)	1 - Brass

Footnotes

[1] Base part number shown. For complete part number, refer to Viking’s current price schedule.

[2] Metric K-factor measurement shown is when pressure is measured in Bar. When pressure is measured in kPa, divide the metric K-factor shown by 10.0.

[3] This table shows the listings and approvals available at the time of printing. Other approvals may be in process.

[4] FM Approved as a standard response pendent **Storage** sprinkler. Refer to Design Criteria below.

DESIGN CRITERIA - FM

(Also refer to Approval Chart 2 above.)

FM Approval Requirements:

1. Sprinkler VK592 is FM Approved as a standard response pendent **Storage** sprinkler as indicated in the FM Approval Guide.
   - For specific application and installation requirements, reference the latest applicable FM Loss Prevention Data Sheets (including Data Sheets 2-0 and 8-9).
2. Approved storage sprinklers are also FM Approved for use as non-storage sprinklers as indicated in the FM Approval Guide.
   - For specific application and installation requirements, reference the latest applicable FM Loss Prevention Data Sheets (including Data Sheet 2-0).

FM Global Loss Prevention Data Sheets contain guidelines relating to, but not limited to: minimum water supply requirements, hydraulic design, ceiling slope and obstructions, minimum and maximum allowable spacing, and deflector distance below the ceiling.

NOTE: The FM installation guidelines may differ from UL and/or NFPA criteria.

IMPORTANT: Always refer to Bulletin Form No. F_091699 - Care and Handling of Sprinklers. Also refer to page F_080614 for general care, installation, and maintenance information. Viking sprinklers are to be installed in accordance with the latest edition of Viking technical data, the appropriate standards of NFPA, FM Global, LPCB, APSAD, VdS or other similar organizations, and also with the provisions of governmental codes, ordinances, and standards, whenever applicable.

NOTE: Viking sprinklers are manufactured and tested to meet rigid requirements of the approving agencies. The sprinklers are designed to be installed in accordance with recognized installation standards or FM Global Loss Prevention Data Sheets. System design must be based on ESFR design guidelines described in the latest edition of the applicable FM Global Loss Prevention Data Sheets, the latest NFPA Standards, the Authorities Having Jurisdiction, and also with the provisions of governmental codes, ordinances, and standards whenever applicable. Wet pipe systems must be supplied with adequate heat