VIKING®	TECHNICAL DATA	ESFR DRY PENDENT SPRINKLER VK502 (K14.0)

The Viking Corporation, 210 N Industrial Park Drive, Hastings MI 49058
Telephone: 269-945-9501 Technical Services: 877-384-5464 Fax: 269-818-1680 Email: techsvcs@vikingcorp.com
Visit the Viking website for the latest edition of this technical data page www.vikinggroupinc.com

1. DESCRIPTION

Viking Early Suppression Fast Response (ESFR) Dry Pendent Sprinkler VK502 is a fast response fusible element type sprinkler designed for use in storage areas subject to freezing and supplied from a **wet system only**, in an adjacent heated area. With a 14.0 (202 metric*) nominal K-factor and special deflector, this sprinkler produces large, high-momentum water droplets in a hemispheric pattern below the deflector. This permits penetration of the fire plume and direct wetting of the burning fuel surface while cooling the atmosphere early in the development of a high-challenge fire.

The dry ESFR sprinkler consists of a fusible element style ESFR sprinkler permanently secured to a special supply nipple. The sprinkler assembly features a sealed brass inlet that's grooved or threaded. Also included with the ESFR dry sprinkler are two insulating boot assemblies (optional) to help seal the clearance space around the dry sprinkler barrel. When properly installed, the seal decreases the potential for leakage of air through the opening in the ceiling and consequent formation of condensate around the sprinkler connection on the system piping. In freezer installations, condensation can lead to ice build-up, which could inhibit sprinkler operation or cause premature sprinkler operation. The dry sprinkler boot assembly is intended to slow the exchange of air between the inside and outside of the freezer (or any dry sprinkler installation) to help prevent humidity and temperature differential in the area around the sprinkler. The rubber seal is designed with a material that will not drip when exposed to open flame. This protects the deflector from acquiring material that would impede its water distribution characteristics.

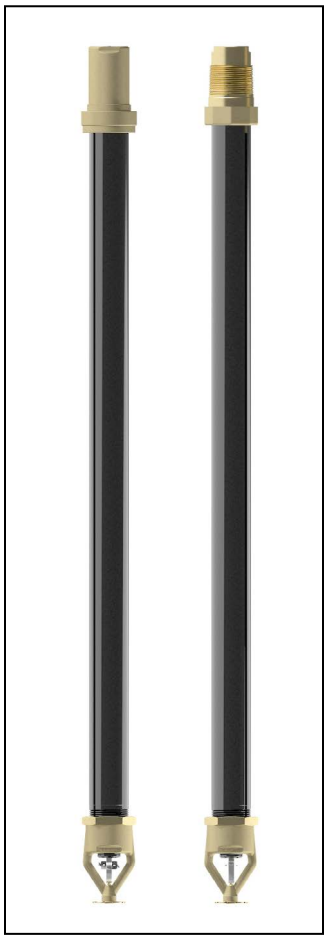

ESFR Sprinkler VK502 (Grooved and Threaded)

NOTICE

Viking recommends use of the included insulating boot assemblies in accordance with the installation instructions in this technical data page. Insulating boot assemblies (optional) shall be installed on smooth, flat, and clean surfaces. There are specific situations, such as corrugated ceiling panels, where alternative penetration sealing methods are utilized. For additional information contact Viking Technical Services.

2. LISTINGS AND APPROVALS

WARNING: Cancer and Reproductive Harm- www.P65Warnings.ca.gov

FM Approved: Class 2008

CE CPR: EAD 100002-00-1106 March 2016, Declaration of Performance DOP_VK502.

Refer to the Approval Chart and Design Criteria for FM Approval requirements that must be followed.

⚠ WARNING

ESFR Dry sprinklers can ONLY be installed in Wet systems! Not for installation in dry or preaction systems.

3. TECHNICAL DATA

Specifications:

Available since 2012.
Tube diameter: 1-11/16" (43.86 mm)
Minimum Operating Pressure: Refer to NFPA 13 or FM Loss Prevention Data Sheets 8-9.
Maximum Working Pressure: 175 psi (12 bar).
Factory tested hydrostatically to 500 psi (34.5 bar).
Connections: 2" grooved or 1½" NPT or BSPT Threaded
Nominal K-factor: 14.0 U.S. (202 metric)
Deflector Diameter: 1-13/32" (35.7 mm)
Overall Length: 18-5/8" (473 mm), 24-5/8" (625 mm), 30-5/8 (778 mm), 36-5/8" (930 mm)

Replaces Form No. F_042012 Rev 02
(Added Fig. 1, install. notices, and PN 28648M/W.)

VIKING®	TECHNICAL DATA	ESFR DRY PENDENT SPRINKLER VK502 (K14.0)

The Viking Corporation, 210 N Industrial Park Drive, Hastings MI 49058
Telephone: 269-945-9501 Technical Services: 877-384-5464 Fax: 269-818-1680 Email: techsvcs@vikingcorp.com
Visit the Viking website for the latest edition of this technical data page www.vikinggroupinc.com

Insulating Boot Assemblies (2 ea): The boot consists of a rubber foam seal covered with a two-piece ring fastened to the ceiling or deck with two screws.
Outside Diameter: 6” (152 mm)
Depth: 1” (25 mm)

Material Standards:

Sprinkler Frame Casting: Brass UNS-C84400
Deflector: Phosphor Bronze UNS-C51000
Seat: Brass UNS-C36000
Belleville Spring Sealing Assembly: Nickel Alloy, coated on both sides with Polytetrafluoroethelyne (PTFE) Tape
Spring Base: Brass UNS-C31400 or UNS-C31600
Back-Up Nut: Brass UNS-C36000
Compression Screw: Stainless Steel UNS-S31603
Trigger and Support: Stainless Steel UNS-S31600
Fusible Element Assembly: Beryllium Nickel, coated with polyurethane
Tube: ERW Steel Tube ASTM A-513, Brass UNS-C36000
Orifice: Brass UNS-C36000
Inlet Casting : Brass UNS-C84400
Support (Internal): Brass UNS-C36000
Barrel: Steel Tube ASTM A-513, Electrodeposited Epoxy Base finish, Brass UNS-C36000

Boot Assemblies:

Seal: ASTM D1056 2A0/1 4015-EL EPDM-Butyl-PE Foam Rubber OR ASTM D1056 2A1 Neoprene/EPDM/SBR OR ASTM D1056 2C1 Neoprene/EPDM
Over Seal Ring and Under Seal Ring: Cold Rolled Steel
Finish: White Paint
#10 Screws: Stainless Steel

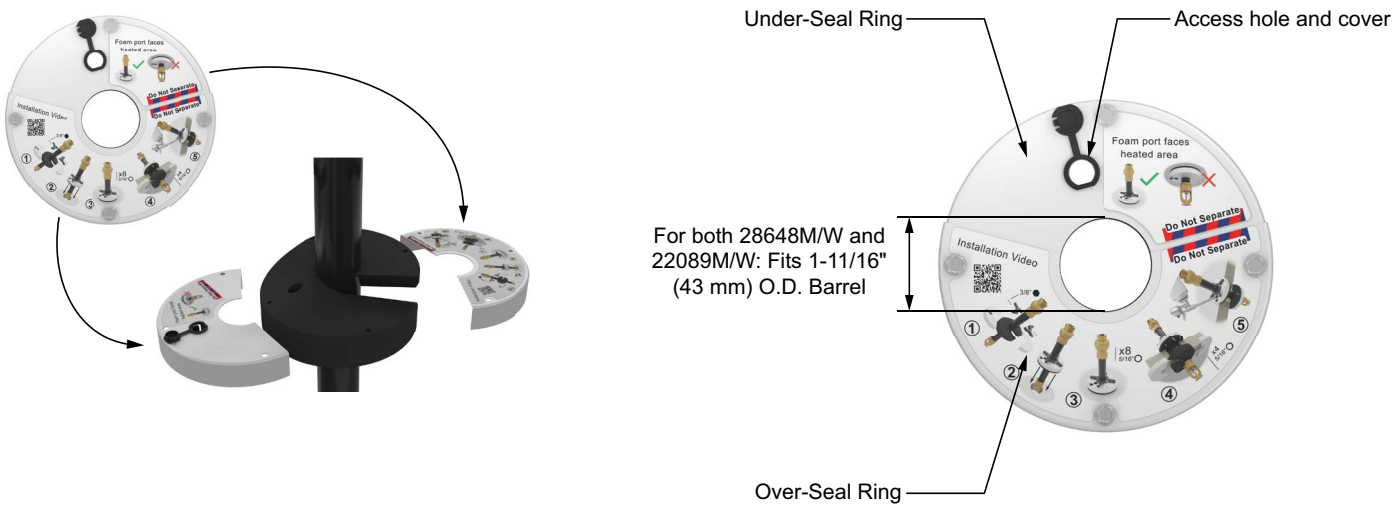

Figure 1: Replacement Boot 28648M/W Components and Dimensions

NOTICE **Installation Instructions**

Refer to document F_030107 for insulation boot installation instructions on a dry sprinkler.

VIKING®	TECHNICAL DATA	ESFR DRY PENDENT SPRINKLER VK502 (K14.0)

The Viking Corporation, 210 N Industrial Park Drive, Hastings MI 49058
Telephone: 269-945-9501 Technical Services: 877-384-5464 Fax: 269-818-1680 Email: techsvcs@vikingcorp.com
Visit the Viking website for the latest edition of this technical data page www.vikinggroupinc.com

Ordering Instructions (Refer to Tables 1 and 2)
1. Choose a sprinkler size (brass is the only available finish) to determine the base part number then,
2. Add the suffix for the desired temperature rating.

NOTE: Sprinkler assemblies include 2 insulating boots unless noted below.

EXAMPLE: 18710AC = VK502 at 30⅝" with a 165 °F (74 °C) temperature rating. This sprinkler is to be installed into an area with a maximum ambient temperature of 100 °F (38 °C) meaning if the area will experience temperatures above the maximum ambient rating, you shall use a higher temperature-rated sprinkler

Replacement Insulating Boot Assemblies:
Part No. 22089M/W (includes 1 boot assembly and hardware)
Part No. 28648M/W (includes 1 boot assembly with access hole, installation label, and hardware)

NOTE: These sprinklers do not require custom wrenches. For grooved sprinklers, use an open-ended wrench applied on the hex portion of the grooved coupling. For threaded sprinkers, use an open-ended wrench applied on the inlet housing.

TABLE 1: BASE PART NUMNBER

1. Available Part Numbers and Styles

Base Part Number	Nominal Length (L)	Connection Style	Connection Size
18702A	18⅝"	Grooved	2"
19908A*	18⅝"		
18706A	24⅝"		
19909A*	24⅝"		
18710A	30⅝"		
19910A*	30⅝"		
18176A	36⅝"		
19895A*	36⅝"		
18703A	18⅝"	NPT Threaded	1½"
18707A	24⅝"		
18711A	30⅝"		
18177A	36⅝"		
18704A	18⅝"	BSPT Threaded	
18708A	24⅝"		
18712A	30⅝"		
19901A*	36⅝"		
18178A	36⅝"		

* Does not include insulating boot.

TABLE 2: TEMPERATURE RATINGS

2. Available Temperature Ratings

Suffix	Temperature Classification	Nominal Temperature Rating	Maximum Ambient Ceiling Temperature	Frame Paint Color
C	Ordinary	165 °F (74 °C)	100 °F (38 °C)	None

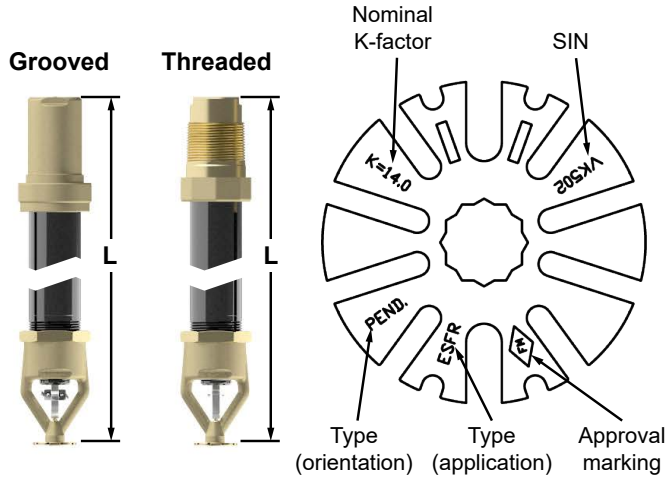

Figure 2: Sprinkler Dimensions and Markings

The Viking Corporation, 210 N Industrial Park Drive, Hastings MI 49058
Telephone: 269-945-9501 Technical Services: 877-384-5464 Fax: 269-818-1680 Email: techsvcs@vikingcorp.com
Visit the Viking website for the latest edition of this technical data page www.vikinggroupinc.com

4. INSTALLATION

Sprinklers must be handled with care. They must be stored in a cool, dry place in their original shipping container. Never install sprinklers that have been dropped or damaged in any way. Such sprinklers should be destroyed immediately.

NOTICE

Wet pipe systems must be provided with adequate heat.

Viking ESFR Dry Sprinklers are to be installed into the 2” grooved or 1½” threaded run of malleable, ductile iron tee fittings that meet the dimensional requirements of ANSI B16.3 (Class 150), or cast iron threaded tee fittings that meet the dimensional requirements of ANSI B16.4 (Class 125), even at branch line ends.

- **DO NOT** install the dry sprinkler into a threaded elbow, coupling, or any other fitting that could interfere with thread penetration. Such installation would damage the brass seal.
- **NEVER** try to modify dry sprinklers. They are manufactured for specific dimensions and must NOT be modified.

1. The sprinklers must be installed after the piping is in place to prevent mechanical damage. Before installing, be sure to have the appropriate sprinkler model and style, with the correct orifice size, temperature rating, and response characteristics.
2. For grooved sprinklers, with the sprinkler contained in the plastic protective shield, apply a lube such as Gruvlok Xtreme™. For threaded sprinklers, apply a small amount of pipe-joint compound or tape to the external threads of the barrel only, while taking care not to allow a build-up of compound or tape over the brass inlet and seal.
3. **For grooved sprinklers, DO NOT use a wrench, as it will damage the unit. Install the coupling according to the manufacturer’s instructions. To install threaded sprinklers, use an open-ended wrench applied to the sprinkler inlet housing. With the sprinkler contained in the protective shield, install the sprinkler onto the piping, while taking care not to damage the sprinkler.**
   - DO NOT use any other type of wrench on the threaded sprinkler, as this could damage the unit.
   - DO NOT use the sprinkler deflector or fusible element to start or thread the a sprinkler into a fitting.
   - Higher levels of torque may distort the sprinkler inlet with consequent leakage or impairment of the sprinkler.
4. Clean the contact surfaces of the dry sprinkler insulating boot assemblies and the surfaces are recommended to be smooth and flat.

NOTICE

Refer to document F_030107 for insulation boot installation instructions on a dry sprinkler.

5. Refer to Figures 3 and 4. Install the dry sprinkler boot assemblies around the dry sprinkler barrel and to the freezer until the seals rest flush against the top of the freezer.
6. Assemble the rings onto the seals, hold in place, and tighten the screws through the holes provided in the assemblies to secure the insulating ring to the top of the freezer. NOTE: A #29 drill is required for a pilot hole in metallic ceilings.
7. After installation, the entire sprinkler system must be tested. The test must be conducted to comply with the Installation Standards. Make sure the sprinkler has been properly tightened. If a thread leak occurs, normally the unit must be removed, new pipe-joint compound or tape applied, and then reinstalled. This is due to the fact that when the joint seal is damaged, the sealing compound or tape is washed out of the joint. Air testing the sprinkler piping prior to testing with water may be considered in areas where leakage during testing must be prevented. Refer to the appropriate technical data and the AHJ prior to air testing the sprinkler piping. Immediately replace any damaged units, using the designated wrench only.
8. After installation and testing and repairing of all leaks, remove the protective shields from the sprinklers by hand. Do NOT use any type of tool to remove the shield. When removing shields, use care to prevent damaging sprinkler fusible element. THE SHIELDS MUST BE REMOVED FROM SPRINKLERS BEFORE PLACING THE SYSTEM IN SERVICE!
9. System design must be based on ESFR design guidelines described in the latest National Fire Protection Association standards, FM loss prevention data sheets, and the Authorities Having Jurisdiction. All requirements of recognized ESFR storage sprinkler system design standards apply to systems utilizing Viking ESFR Dry Pendent Sprinklers.

VIKING®	TECHNICAL DATA	ESFR DRY PENDENT SPRINKLER VK502 (K14.0)

The Viking Corporation, 210 N Industrial Park Drive, Hastings MI 49058
Telephone: 269-945-9501 Technical Services: 877-384-5464 Fax: 269-818-1680 Email: techsvcs@vikingcorp.com
Visit the Viking website for the latest edition of this technical data page www.vikinggroupinc.com

⚠ WARNING

Viking sprinklers are manufactured and tested to meet rigid design requirements of the approving agency. The sprinklers are designed to be installed in accordance with recognized installation standards. System design must be based on ESFR design guidelines described in the latest edition of Viking technical data, applicable FM Global Loss Prevention Data Sheets, the latest NFPA Standards, the Authorities Having Jurisdiction, and also with the provisions of governmental codes, ordinances, and standards whenever applicable. Deviation from the standards or any alteration to the sprinkler after it leaves the factory including, but not limited to: painting, plating, coating, or modification, may render the sprinkler inoperative and will automatically nullify the approval and any guarantee made by The Viking Corporation.

5. OPERATION

During fire conditions, the heat-sensitive fusible element assembly disengages, releasing the internal parts to open the waterway. Water flowing through the sprinkler orifice strikes the sprinkler deflector, forming a uniform spray pattern to suppress the fire.

6. INSPECTIONS, TESTS AND MAINTENANCE

NOTICE

The owner is responsible for maintaining the fire protection system and devices in proper operating condition. For minimum maintenance and inspection requirements, refer to the NFPA standard that describes care and maintenance of sprinkler systems. In addition, the Authorities Having Jurisdiction may have additional maintenance, testing, and inspection requirements that must be followed.

1. The sprinklers must be inspected on a regular basis for corrosion, mechanical damage, obstructions, paint, etc. The frequency of inspections may vary due to corrosive atmosphere, water supplies, and activity around the device.
2. Sprinklers that have been painted or mechanically damaged must be replaced immediately. Sprinklers showing signs of corrosion shall be tested and/or replaced immediately as required. Installation standards require sprinklers to be tested and, if necessary, replaced after a specified term of service. For Viking ESFR Dry Pendent Sprinklers, refer to the Installation Standards (e.g., NFPA 25) and the Authorities Having Jurisdiction for the specified period of time after which testing and/or replacement is required. Sprinklers that have operated cannot be reassembled or reused, but must be replaced. When replacing sprinklers, use only new sprinklers.
3. The sprinkler discharge pattern is critical for proper fire protection. Therefore, nothing should be hung from, attached to, or otherwise obstruct the discharge pattern. All obstructions must be immediately removed or, if necessary, additional sprinklers installed.
4. When replacing existing sprinklers, the system must be removed from service. Refer to the appropriate system description and/or valve instructions. Prior to removing the system from service, notify all Authorities Having Jurisdiction. Consideration should be given to employment of a fire patrol in the affected area.
   a. Remove the system from service, drain all water, and relieve all pressure on the piping.
   b. Remove the ESFR dry sprinkler insulating boot assemblies.
   c. Using the designated wrench, remove the old sprinkler and install the new unit. Care must be taken to ensure that the replacement sprinkler is the proper model and style, with the correct orifice size, temperature rating, and response characteristics.
   d. Install new ESFR dry sprinkler boot assemblies.
   e. Place the system back in service and secure all valves. Check the replaced sprinklers and repair all leaks.
5. Sprinkler systems that have been subject to a fire must be returned to service as soon as possible. The entire system must be inspected for damage and repaired or replaced as necessary. Sprinklers that have been exposed to corrosive products of combustion, but have not operated, should be replaced. Refer to the Authorities Having Jurisdiction for minimum replacement requirements.

The Viking Corporation, 210 N Industrial Park Drive, Hastings MI 49058
Telephone: 269-945-9501 Technical Services: 877-384-5464 Fax: 269-818-1680 Email: techsvcs@vikingcorp.com
Visit the Viking website for the latest edition of this technical data page www.vikinggroupinc.com

7. APPROVAL DESIGN REQUIREMENTS

Approval Chart
ESFR Dry Pendent Sprinkler VK502
Maximum 175 PSI (12 bar) WWP

KEY: A1X — Temperature, Finish, Escutcheon (if applicable)

Base Part Number[1]				SIN	Connections	Nominal K-Factor		Approval [2,3] (Refer also to Design Criteria.)	
								FM	CE
18702	18706	18710	18176	VK502	2” Grooved	14.0	202	A1	A1
19908	19909	19910	19895	VK502	2” Grooved w/o boot	14.0	202	A1	A1
18703	18707	18711	18177	VK502	1½” NPT Threaded	14.0	202	A1	A1
18704	18708	18712	18178	VK502	1½” BSPT Threaded	14.0	202	A1	A1
--	--	--	19901	VK502	1½” BSPT Threaded w/o boot	14.0	202	A1	A1

Approved Temperature Rating	Approved Finish
A - 165 °F (74 °C)	1- Brass

Footnotes

[1] Base part number shown. For complete part number, refer to the price list.

[2] This chart shows listings and approvals available at the time of printing. Other approvals may be in process.

[3] Refer to the latest standards of NFPA 13.

FM Approval Requirements:

1. Sprinkler VK502 is FM Approved as a quick response pendent Storage sprinkler as indicated in the FM Approval Guide. For specific application and installation requirements, reference the latest applicable FM Loss Prevention Data Sheets (including Data Sheets 2-0 and 8-9).
2. Approved storage sprinklers are also FM Approved for use as non-storage sprinklers as indicated in the FM Approval Guide. For specific application and installation requirements, reference the latest applicable FM Loss Prevention Data Sheets (including Data Sheet 2-0).

FM Global Loss Prevention Data Sheets contain guidelines relating to, but not limited to: minimum water supply requirements, hydraulic design, ceiling slope and obstructions, minimum and maximum allowable spacing, and deflector distance below the ceiling.

NOTICE: The FM installation guidelines may differ from NFPA criteria.

8. AVAILABILITY

The Viking Model VK502 Sprinkler is available through a network of domestic and international distributors. See The Viking Corporation web site for the closest distributor or contact The Viking Corporation.

9. GUARANTEE

For details of warranty, refer to Viking’s current list price schedule or contact Viking directly.

The Viking Corporation, 210 N Industrial Park Drive, Hastings MI 49058
Telephone: 269-945-9501 Technical Services: 877-384-5464 Fax: 269-818-1680 Email: techsvcs@vikingcorp.com
Visit the Viking website for the latest edition of this technical data page www.vikinggroupinc.com

TABLE 4:
COMMODITY SELECTION AND DESIGN CRITERIA OVERVIEW FOR MODEL VK502 AS PER NFPA CRITERIA

Description	40 ft. (12.2 m) Ceilings
Sprinkler Type	ESFR
Temperature Rating	165 ºF (74 ºC)
Response Type	ESFR
Sprinkler Position	Pendent, frame arms aligned with pipe, deflectors parallel with ceiling or roof
System Type	Wet Pipe System only
Maximum Area of Coverage	100 ft^2 (9,3 m^2)
Minimum Area of Coverage	64 ft^2 (5,9 m^2)
Maximum Ceiling Slope	2 in 12
Maximum Spacing	10 ft. spacing (3,0 m)
Minimum Spacing	8 ft. spacing (2,4 m)
Deflector Distance from Walls	Minimum of 4 in. (102 mm) from walls but no more than 1/2 the allowable distance permitted between sprinklers
Deflector to Top of Storage	Minimum of 36 in. (914 mm)
Deflector to Ceiling Distance	For all building heights: 6–14 in. (152–356 mm).
Maximum Ceiling Height	40 ft. (12,2 m)
Maximum Storage Height	35 ft. (10,7 m)
Clearance Opening Diameter	Refer to Figure 3. Note that the dry sprinkler boot must seat and seal against the smooth surface of the top of the freezer in order to close the air gap.
Sprinkler Fitting	Install into the 2” grooved or 1-1/2” threaded run of malleable, ductile iron tee fittings that meet the dimensional requirements of ANSI B16.3 (Class 150), or cast iron threaded tee fittings that meet the dimensional requirements of ANSI B16.4 (Class 125) only.
Maximum Distance Between Sprinklers	For buildings over 30 ft (9.1 m) high, spacing between sprinklers and/or branch lines must be from 8 to 10 ft (2.4 to 3.1 m)**.
	For building heights up to 30 ft (9.1 m), the spacing allowed between sprinklers and/or branch lines is 8 to 12 ft (2.4 to 3.7 m), provided the area covered per sprinkler does not exceed the maximum 100 ft^2 (9.3 m^2) allowed*.

*Refer to the Installation Standards for permissible deviations from the maximum sprinkler spacing rules above, to eliminate obstructions created by trusses and bar joists when using ESFR sprinklers.

The Viking Corporation, 210 N Industrial Park Drive, Hastings MI 49058
Telephone: 269-945-9501 Technical Services: 877-384-5464 Fax: 269-818-1680 Email: techsvcs@vikingcorp.com
Visit the Viking website for the latest edition of this technical data page www.vikinggroupinc.com

TABLE 5:
COMMODITY SELECTION AND DESIGN CRITERIA OVERVIEW FOR MODEL VK502
SPECIFIC APPLICATION LISTING - FM

Description	35 ft. (12.2 m) Ceilings
Sprinkler Type	ESFR
Temperature Rating	165 ºF (74 ºC)
Response Type	ESFR
Sprinkler Position	Pendent, frame arms aligned with pipe, deflectors parallel with ceiling or roof
System Type	Wet Pipe System only
Maximum Area of Coverage	100 ft^2 (9,3 m^2)
Minimum Area of Coverage	64 ft^2 (5,9 m^2)
Maximum Ceiling Slope	2 in 12
Maximum Spacing	10 ft. spacing (3,0 m)
Minimum Spacing	8 ft. spacing (2,4 m)
Deflector Distance from Walls	Minimum of 4 in. (102 mm) from walls but no more than 1/2 the allowable distance permitted between sprinklers
Deflector to Top of Storage	Minimum of 36 in. (914 mm)
Ceiling to Center of Operating Element	For all building heights: 2–13 in. (51–330 mm)
Maximum Ceiling Height	40 ft. (12,2 m)
Maximum Storage Height	35 ft. (10,7 m)
Clearance Opening Diameter	Refer to Figure 3. Note that the dry sprinkler boot must seat and seal against the smooth surface of the top of the freezer in order to close the air gap.
Sprinkler Fitting	Install into the 2” grooved or 1-1/2” threaded run of malleable, ductile iron tee fittings that meet the dimensional requirements of ANSI B16.3 (Class 150), or cast iron threaded tee fittings that meet the dimensional requirements of ANSI B16.4 (Class 125) only.
Maximum Distance Between Sprinklers	For buildings over 30 ft (9.1 m) high, spacing between sprinklers and/or branch lines must be from 8 to 10 ft (2.4 to 3.1 m)**.
	For building heights up to 30 ft (9.1 m), the spacing allowed between sprinklers and/or branch lines is 8 to 12 ft (2.4 to 3.7 m), provided the area covered per sprinkler does not exceed the maximum 100 ft^2 (9.3 m^2) allowed*.

*Refer to the Installation Standards for permissible deviations from the maximum sprinkler spacing rules above, to eliminate obstructions created by trusses and bar joists when using ESFR sprinklers.

VIKING®	TECHNICAL DATA	ESFR DRY PENDENT SPRINKLER VK502 (K14.0)

The Viking Corporation, 210 N Industrial Park Drive, Hastings MI 49058
Telephone: 269-945-9501 Technical Services: 877-384-5464 Fax: 269-818-1680 Email: techsvcs@vikingcorp.com
Visit the Viking website for the latest edition of this technical data page www.vikinggroupinc.com

OPTIONAL ALTERNATIVE PENETRATION SEAL METHODS
NOTE: Actual conditions may vary.

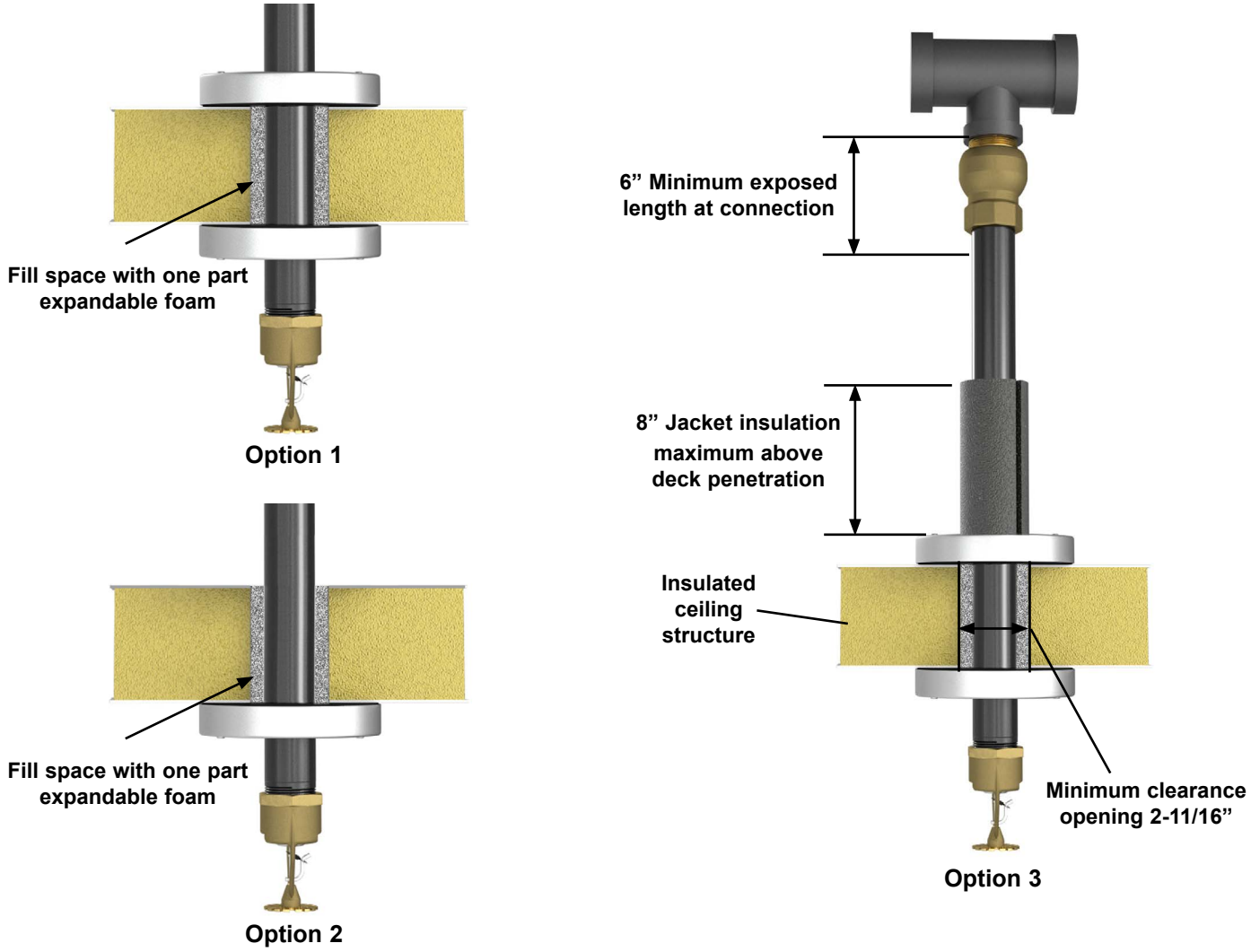

Figure 3

NOTICE

Specific situations and conditions may exist that require alternative sealing methods. A few of these methods are shown above as Options 1–3. Additional sealing methods may also be utilized; the material(s) used must not break down, drip, over-spray, or otherwise interfere with or impede the operation of the sprinkler—especially during fire conditions.

The Viking Corporation, 210 N Industrial Park Drive, Hastings MI 49058
Telephone: 269-945-9501 Technical Services: 877-384-5464 Fax: 269-818-1680 Email: techsvcs@vikingcorp.com
Visit the Viking website for the latest edition of this technical data page www.vikinggroupinc.com

INSTALLATION CHARTS FOR MAXIMUM DEFLECTOR CLEARANCE

Table 6: NFPA Exposed Barrel Lengths For Dry Sprinklers

Ambient Temperature of the Protected Area at the discharge end of the Sprinkler	Exposed Barrel Ambient Temperature		
	40 °F (4 °C)	50 °F (10 °C)	60 °F (16 °C)
	Minimum Exposed Barrel Lengths (based on ambient temperaures above)		
	Inches (mm)	Inches (mm)	Inches (mm)
40 °F (4 °C)	0	0	0
30 °F (-1 °C)	0	0	0
20 °F (-7 °C)	4 (100)	0	0
10 °F (-12 °C)	8 (200)	1 (25)	0
0 °F (-18 °C)	12 (300)	3 (75)	0
-10 °F (-23 °C)	14 (350)	4 (100)	1 (25)
-20 °F (-29 °C)	14 (350)	6 (150)	3 (75)
-30 °F (-34 °C)	16 (400)	8 (200)	4 (100)
-40 °F (-40 °C)	18 (450)	8 (200)	4 (100)
-50 °F (-46 °C)	20 (500)	10 (250)	6 (150)
-60 °F (-51 °C)	20 (500)	10 (250)	6 (150)

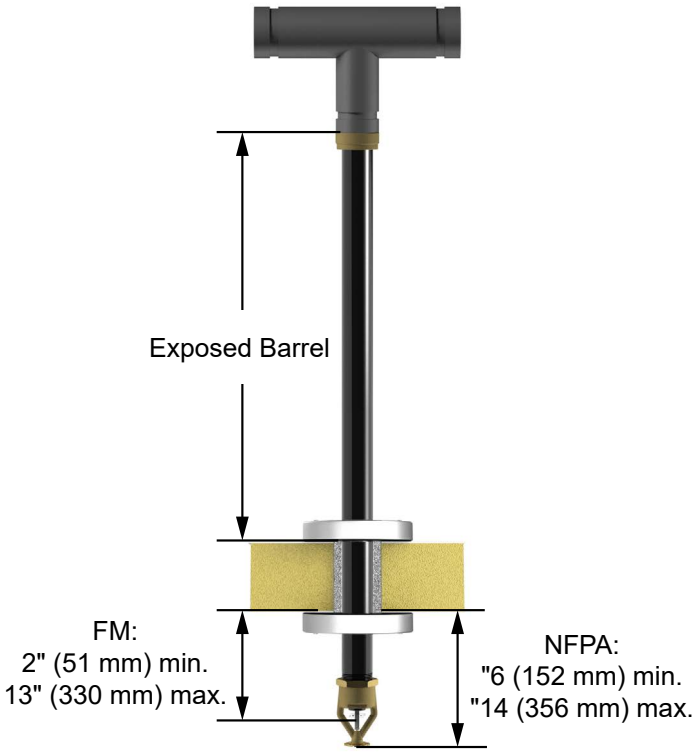

Figure 4: Minumum Exposed Barrel Length

VIKING

BULLETIN

CARE AND HANDLING OF SPRINKLERS

The Viking Corporation, 210 N Industrial Park Drive, Hastings MI 49058
Telephone: 269-945-9501 Technical Services: 877-384-5464 Fax: 269-818-1680 Email: techsvcs@vikingcorp.com

SPRINKLERS ARE FRAGILE - HANDLE WITH CARE!

General Handling and Storage:

- Store sprinklers in a cool, dry place.
- Protect sprinklers during storage, transport, handling, and after installation.
- Use the original shipping containers. DO NOT place sprinklers loose in boxes, bins, or buckets.
- Keep sprinklers separated at all times. DO NOT allow metal parts to contact sprinkler operating elements.

For Pre-Assembled Drops:

- Protect sprinklers during handling and after installation.
- For recessed assemblies, use the protective sprinkler cap (Viking Part Number 10364).

Sprinklers with Protective Shields or Caps:

- DO NOT remove shields or caps until after sprinkler installation and there no longer is potential for mechanical damage to the sprinkler operating elements.
- **Sprinkler shields or caps MUST be removed BEFORE placing the system in service!**
- Remove the sprinkler shield by carefully pulling it apart where it is snapped together.
- Remove the cap by turning it slightly and pulling it off the sprinkler.

Sprinkler Installation:

- DO NOT use the sprinkler deflector or operating element to start or thread the sprinkler into a fitting.
- **Use only the designated sprinkler head wrench!** Refer to the current sprinkler technical data page to determine the correct wrench for the model of sprinkler used.
- DO NOT install sprinklers onto piping at the floor level.
- Install sprinklers after the piping is in place to prevent mechanical damage.
- DO NOT allow impacts such as hammer blows directly to sprinklers or to fittings, pipe, or couplings in close proximity to sprinklers. Sprinklers can be damaged from direct or indirect impacts.
- DO NOT attempt to remove drywall, paint, etc., from sprinklers.
- **Take care not to over-tighten the sprinkler and/or damage its operating parts!**

  Maximum Torque:
  1/2" NPT: 14 ft-lbs. (19.0 N-m)
  3/4" NPT: 20 ft-lbs. (27.1 N-m)
  1" NPT: 30 ft-lbs. (40.7 N-m)

CORRECT
(Original container used)

INCORRECT
(Placed loose in box)

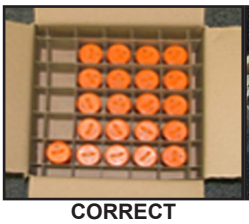

CORRECT
(Protected with caps)

INCORRECT
(Protective caps not used)

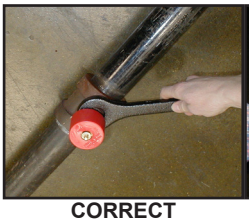

CORRECT
(Piping is in place at the ceiling)

INCORRECT
(Sprinkler at floor level)

CORRECT
(Special installation wrenches)

INCORRECT
(Designated wrench not used)

WARNING: Cancer and Reproductive Harm-
www.P65Warnings.ca.gov

⚠ WARNING

Any sprinkler with a loss of liquid from the glass bulb or damage to the fusible element should be destroyed. Never install sprinklers that have been dropped, damaged, or exposed to temperatures exceeding the maximum ambient temperature allowed. Sprinklers that have been painted in the field must be replaced per NFPA 13. Protect sprinklers from paint and paint overspray in accordance with the installation standards. Do not clean sprinklers with soap and water, ammonia, or any other cleaning fluid. Do not use adhesives or solvents on sprinklers or their operating elements.

Refer to the appropriate technical data page and NFPA standards for complete care, handling, installation, and maintenance instructions. For additional product and system information Viking data pages and installation instructions are available on the Viking Web site at www.vikinggroupinc.com.

VIKING | BULLETIN | CARE AND HANDLING OF SPRINKLERS

The Viking Corporation, 210 N Industrial Park Drive, Hastings MI 49058
Telephone: 269-945-9501 Technical Services: 877-384-5464 Fax: 269-818-1680 Email: techsvcs@vikingcorp.com

PROTECTIVE SPRINKLER SHIELDS AND CAPS

General Handling and Storage:

Many Viking sprinklers are available with a plastic protective cap or shield temporarily covering the operating elements. The snap-on shields and caps are factory installed and are intended to help protect the operating elements from mechanical damage during shipping, storage, and installation. NOTE: It is still necessary to follow the care and handling instructions on the appropriate sprinkler technical data sheets* when installing sprinklers with bulb shields or caps.

WHEN TO REMOVE THE SHIELDS AND CAPS:

NOTE: SHIELDS AND CAPS MUST BE REMOVED FROM SPRINKLERS BEFORE PLACING THE SYSTEM IN SERVICE!

Remove the shield or cap from the sprinkler only after checking all of the following:

- The sprinkler has been installed*.
- The wall or ceiling finish work is completed where the sprinkler is installed and there no longer is a potential for mechanical damage to the sprinkler operating elements.

SHIELDS AND CAPS MUST BE REMOVED FROM SPRINKLERS BEFORE PLACING THE SYSTEM IN SERVICE!

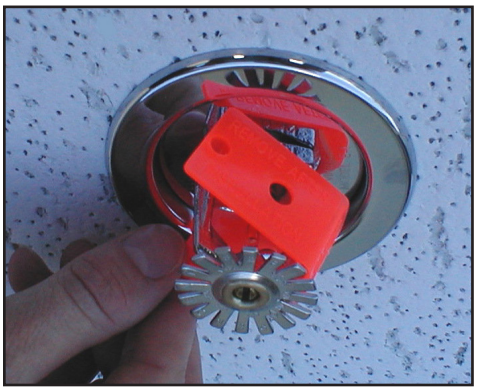

Figure 1: Sprinkler shield being removed from a pendent sprinkler.

Figure 2: Sprinkler cap being removed from a pendent sprinkler.

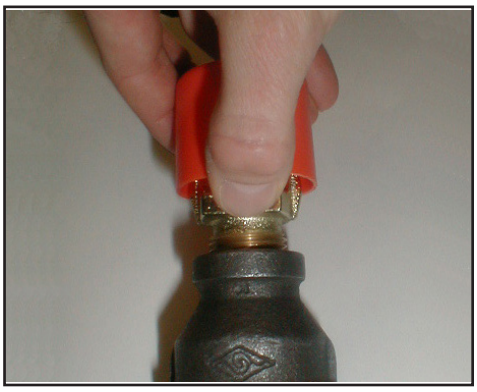

Figure 3: Sprinkler cap being removed from and upright sprinkler.

HOW TO REMOVE SHIELDS AND CAPS:

No tools are necessary to remove the shields or caps from sprinklers. DO NOT use any sharp objects to remove them! **Take care not to cause mechanical damage to sprinklers when removing the shields or caps.** When removing caps from fusible element sprinklers, use care to prevent dislodging ejector springs or damaging fusible elements. NOTE: Squeezing the sprinkler cap excessively could damage sprinkler fusible elements.

- To remove the shield, simply pull the ends of the shield apart where it is snapped together. Refer to Figure 1.
- To remove the cap, turn it slightly and pull it off the sprinkler. Refer to Figures 2 and 3.

NOTICE Refer to the current sprinkler technical data page to determine the correct sprinkler wrench for the model of sprinkler used.

WARNING Never install sprinklers that have been dropped, damaged, or exposed to temperatures in excess of the maximum ambient temperature allowed.

*** Refer to the appropriate current technical data pages for complete care, handling, and installation instructions. Data pages are included with each shipment from Viking or Viking distributors. They can also be found on the Web site at www.vikinggroupinc.com.**

VIKING	BULLETIN	CARE AND HANDLING OF SPRINKLERS

The Viking Corporation, 210 N Industrial Park Drive, Hastings MI 49058
Telephone: 269-945-9501 Technical Services: 877-384-5464 Fax: 269-818-1680 Email: techsvcs@vikingcorp.com

CAUTION CONCEALED COVER ASSEMBLIES ARE FRAGILE!
TO ASSURE SATISFACTORY PERFORMANCE OF THE PRODUCT, HANDLE WITH CARE.

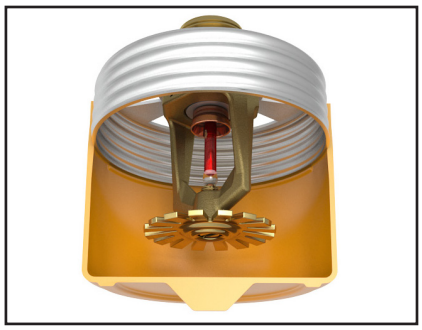

Concealed Sprinkler and Adapter Assembly with Protective Cap

Concealed Sprinkler and Adapter Assembly (Protective Cap Removed)

Cover Plate Assembly (Pendent Cover 12381 shown)

GENERAL HANDLING AND STORAGE INSTRUCTIONS:

- Do not store in temperatures exceeding 100 °F (38 °C). Avoid direct sunlight and confined areas subject to heat.
- Protect sprinklers and cover assemblies during storage, transport, handling, and after installation.
  -- Use original shipping containers.
  -- Do not place sprinklers or cover assemblies loose in boxes, bins, or buckets.
- Keep the sprinkler bodies covered with the protective sprinkler cap any time the sprinklers are shipped or handled, during testing of the system, and while ceiling finish work is being completed.
- Use only the designated Viking recessed sprinkler wrench (refer to the appropriate sprinkler data page) to install these sprinklers. **NOTE:** The protective cap is temporarily removed during installation and then placed back on the sprinkler for protection until finish work is completed.
- Do not over-tighten the sprinklers into fittings during installation.
- Do not use the sprinkler deflector to start or thread the sprinklers into fittings during installation.
- Do not attempt to remove drywall, paint, etc., from the sprinklers.
- Remove the plastic protective cap from the sprinkler before attaching the cover plate assembly. **PROTECTIVE CAPS <u>MUST</u> BE REMOVED FROM SPRINKLERS BEFORE PLACING THE SYSTEM IN SERVICE!**

Refer to the appropriate current technical data pages for complete care, handling, and installation instructions. Data pages are included with each shipment from Viking or Viking distributors. They can also be found on the Web site at www.vikinggroupinc.com.

VIKING | BULLETIN | CARE AND HANDLING OF SPRINKLERS

The Viking Corporation, 210 N Industrial Park Drive, Hastings MI 49058
Telephone: 269-945-9501 Technical Services: 877-384-5464 Fax: 269-818-1680 Email: techsvcs@vikingcorp.com

USE THE FOLLOWING PRECAUTIONS WHEN HANDLING WAX-COATED SPRINKLERS

Many of Viking's sprinklers are available with factory-applied wax coating for corrosion resistance. These sprinklers MUST receive appropriate care and handling to avoid damaging the wax coating and to assure satisfactory performance of the product.

General Handling and Storage of Wax-Coated Sprinklers:

- Store the sprinklers in a cool, dry place (in temperatures below the maximum ambient temperature allowed for the sprinkler temperature rating. Refer to Table 1 below.)
- Store containers of wax-coated sprinklers separate from other sprinklers.
- Protect the sprinklers during storage, transport, handling, and after installation.
- Use original shipping containers.
- Do not place sprinklers in loose boxes, bins, or buckets.

Installation of Wax-Coated Sprinklers:

Use only the special sprinkler head wrench designed for installing wax-coated Viking sprinklers (any other wrench may damage the unit).

- Take care not to crack the wax coating on the units.
- For touching up the wax coating after installation, wax is available from Viking in bar form. Refer to Table 1 below. The coating MUST be repaired after sprinkler installation to protect the corrosion-resistant properties of the sprinkler.
- Use care when locating sprinklers near fixtures that can generate heat. Do not install sprinklers where they would be exposed to temperatures exceeding the maximum recommended ambient temperature for the temperature rating used.
- Inspect the coated sprinklers frequently soon after installation to verify the integrity of the corrosion resistant coating. Thereafter, inspect representative samples of the coated sprinklers in accordance with NFPA 25. Close up visual inspections are necessary to determine whether the sprinklers are being affected by corrosive conditions.

TABLE 1

Sprinkler Temperature Rating (Fusing Point)	Wax Part Number	Wax Melting Point	Maximum Ambient Ceiling Temperature[1]	Wax Color
155 °F (68 °C) / 165 °F (74 °C)	02568A	148 °F (64 °C)	100 °F (38 °C)	Light Brown
175 °F (79 °C)	04146A	161 °F (71 °C)	150 °F (65 °C)	Brown
200 °F (93 °C)	04146A	161 °F (71 °C)	150 °F (65 °C)	Brown
220 °F (104 °C)	02569A	170 °F (76 °C)	150 °F (65 °C)	Dark Brown
286 °F (141 °C)	02569A	170 °F (76 °C)	150 °F (65 °C)	Dark Brown

[1] Based on NFPA-13. Other limits may apply, depending on fire loading, sprinkler location, and other requirements of the Authority Having Jurisdiction. Refer to specific installation standards.

⚠WARNING Never install sprinklers that have been dropped, damaged, or exposed to temperatures in excess of the maximum ambient temperature allowed.

Refer to the appropriate current technical data pages for complete care, handling, and installation instructions. Data pages are included with each shipment from Viking or Viking distributors. They can also be found on the Web site at www.vikinggroupinc.com.

VIKING | TECHNICAL DATA | SPRINKLER OVERVIEW

The Viking Corporation, 210 N Industrial Park Drive, Hastings MI 49058
Telephone: 269-945-9501 Technical Services: 877-384-5464 Fax: 269-818-1680 Email: techsvcs@vikingcorp.com

1. DESCRIPTION

Viking fire sprinklers consist of a threaded frame with a specific waterway or orifice size and a deflector for distributing water in a specified pattern. A closed or sealed sprinkler refers to a complete assembly, including the thermosensitive operating element. An open sprinkler does not use an operating element and is open at all times. The distribution of water is intended to extinguish a fire or to control its spread.

Viking sprinklers are available in several models and styles. Refer to specific sprinkler technical data pages for available styles, finishes, temperature ratings, thread sizes, and nominal K-Factors for the particular model selected.

2. LISTINGS AND APPROVALS

Refer to the Approval Charts on the appropriate sprinkler technical data page(s) and/or approval agency listings.

WARNING: Cancer and Reproductive Harm-
www.P65Warnings.ca.gov

3. TECHNICAL DATA

Pressure Ratings:

Maximum allowable water working pressure is 175 psig (12 Bar) unless rated and specified for high water working pressure [250 psig (17.2 bar)].

Sprinkler Identification:

Viking sprinklers are identified and marked with the word “Viking”, the sprinkler identification number (SIN) consisting of “VK” plus a three digit number*, the model letter, and the year of manufacture.

Available Finishes:

Viking sprinklers are available in several decorative finishes. Some models are available with corrosion-resistant coatings or are fabricated from non-corrosive material. Refer to the sprinkler technical data page for additional information.

Available Temperature Ratings:

Viking sprinklers are available in several temperature ratings that relate to a specific temperature classification. Applicable installation rules mandate the use and limitations of each temperature classification. In selecting the appropriate temperature classification, the maximum expected ceiling temperature must be known. When there is doubt as to the maximum temperature at the sprinkler location, a maximum-reading thermometer should be used to determine the temperature under conditions that would show the highest readings to be expected. In addition, recognized installation rules may require a higher temperature classification, depending upon sprinkler location, occupancy classification, commodity classification, storage height, and other hazards. In all cases, the maximum expected ceiling temperature dictates the lowest allowable temperature classification. Sprinklers located immediately adjacent to a heat source may require a higher temperature rating.

K-Factors:

Viking sprinklers are available in several orifice sizes with related K-Factors. The orifice is a tapered waterway and, therefore, the K-Factor given is nominal. Nominal U.S. K-Factors are provided in accordance with the 1999 edition of NFPA 13, Section 3-2.3. Refer to the specific data page for appropriate K-Factor information.

Available Styles:

Viking sprinklers are available for installation in several positions as indicated by a stamping on the deflector. The deflector style dictates the appropriate installation position of the sprinkler; it breaks the solid stream of water issuing from the sprinkler orifice to form a specific spray pattern. The following list indicates the various styles and identification of Viking sprinklers.

UPRIGHT SPRINKLER: A sprinkler intended to be installed with the deflector above the frame so water flows upward through the orifice, striking the deflector and forming an umbrella-shaped spray pattern downward. Marked “SSU” (Standard Sprinkler Upright) or “UPRIGHT” on the deflector.

PENDENT SPRINKLER: A sprinkler intended to be oriented with the deflector below the frame so water flows downward through the orifice, striking the deflector and forming an umbrella-shaped spray pattern downward. Marked “SSP” (Standard Sprinkler Pendent) or “PENDENT” on the deflector.

Viking Technical Data may be found on The Viking Corporation’s Web site at http://www.vikinggroupinc.com. The Web site may include a more recent edition of this Technical Data Page.

CONVENTIONAL SPRINKLER: An “old style” sprinkler intended to be installed with the deflector in either the upright or pendent position. The deflector provides a spherical type pattern with 40 to 60 percent of the water initially directed downward and a proportion directed upward. Must be installed in accordance with installation rules for conventional or old style sprinklers. DO NOT USE AS A REPLACEMENT FOR STANDARD SPRAY SPRINKLERS. Marked “C U/P” (Conventional Upright/Pendent) on the deflector.

The Viking Corporation, 210 N Industrial Park Drive, Hastings MI 49058
Telephone: 269-945-9501 Technical Services: 877-384-5464 Fax: 269-818-1680 Email: techsvcs@vikingcorp.com

VERTICAL SIDEWALL (VSW) SPRINKLER: A sprinkler intended for installation near the wall and ceiling. The deflector provides a water spray pattern outward in a quarter-spherical pattern and can be installed in the upright or pendent position with the flow arrow in the direction of discharge. Marked “SIDEWALL” on the deflector with an arrow and the word “FLOW”. (Note: Some vertical sidewall sprinklers can only be installed in the upright or pendent position—in this case, the sprinkler will also be marked “UPRIGHT” or “PENDENT”.)

HORIZONTAL SIDEWALL (HSW) SPRINKLER: A sprinkler intended for installation near the wall and ceiling. The special deflector provides a water spray pattern outward in a quarter-spherical pattern. Most of the water is directed away from the nearby wall with a small portion directed at the wall behind the sprinkler. The top of the deflector is oriented parallel with the ceiling or roof. The flow arrows point in the direction of discharge. Marked “SIDEWALL” and “TOP” with an arrow and the word “FLOW”.

EXTENDED COVERAGE (EC) SPRINKLER: A spray sprinkler designed to discharge water over an area having the maximum dimensions indicated in the individual listings. Maximum area of coverage, minimum flow rate, orifice size, and nominal K-Factor are specified in the individual listings. EC sprinklers are intended for Light-Hazard occupancies with smooth, flat, horizontal ceilings unless otherwise specified. In addition to the above markings, the sprinkler is marked “EC”.

QUICK RESPONSE (QR) SPRINKLER: A spray sprinkler with a fast- actuating operating element. The use of quick response sprinklers may be limited due to occupancy and hazard. Refer to the Authority Having Jurisdiction (AHJ) prior to installing.

QUICK RESPONSE EXTENDED COVERAGE (QREC) SPRINKLER: A spray sprinkler designed to discharge water over an area having the maximum dimensions indicated in the individual listing. This is a sprinkler with an operating element that meets the criteria for quick response. QREC sprinklers are only intended for Light Hazard occupancies. The sprinkler is marked “QREC”.

FLUSH SPRINKLER: A decorative spray sprinkler intended for installation with a concealed piping system. The unit is mounted flush with the ceiling or wall, with the fusible link exposed. Upon actuation, the deflector extends beyond the ceiling or wall to distribute water discharge. The sprinkler is marked “SSP”, “PEND”, or “SIDEWALL” and “TOP”.

CONCEALED SPRINKLER: A decorative spray sprinkler intended for installation with a concealed piping system. The sprinkler is hidden from view by a cover plate installed flush with the ceiling or wall. During fire conditions, the cover plate detaches, and upon sprinkler actuation, the deflector extends beyond the ceiling or wall to distribute water discharge. The sprinkler is marked “SSP”, “PEND”, or “SIDEWALL” and “TOP”.

RECESSED SPRINKLER: A spray sprinkler assembly intended for installation with a concealed piping system. The assembly consists of a sprinkler installed in a decorative adjustable recessed escutcheon that minimizes the protrusion of the sprinkler beyond the ceiling or wall without adversely affecting the sprinkler distribution or sensitivity. Refer to the appropriate technical data page for allowable sprinkler models, temperature ratings, and occupancy classifications. DO NOT RECESS ANY SPRINKLER NOT LISTED FOR USE WITH THE ESCUTCHEON.

CORROSION-RESISTANT SPRINKLER: A special service sprinkler with non-corrosive protective coatings, or that is fabricated from non-corrosive material, for use in atmospheres that would normally corrode sprinklers.

DRY SPRINKLER: A special-service sprinkler intended for installation on dry pipe systems or wet pipe systems where the sprinkler is subject to freezing temperatures. The unit consists of a sprinkler permanently secured to an extension nipple with a sealed inlet end to prevent water from entering the nipple until the sprinkler operates. The unit MUST be installed in a tee fitting. Dry upright sprinklers are marked with the “B” dimension [distance from the face of the fitting (tee) to the top of the deflector]. Dry pendent and sidewall sprinklers are marked with the “A” dimension [the distance from the face of fitting (tee) to the finished surface of the ceiling or wall].

LARGE DROP SPRINKLER: A type of special application sprinkler used to provide fire control of specific high-challenge fire hazards. Large drop sprinklers are designed to produce an umbrella-shaped spray pattern downward with a higher percentage of “large” water droplets than standard spray sprinklers. The sprinkler has an extra-large orifice with a nominal K-Factor of 11.2. Marked “HIGH CHALLENGE” and “UPRIGHT”.

EARLY SUPPRESSION FAST-RESPONSE (ESFR) SPRINKLER: A sprinkler intended to provide fire suppression of specific high-challenge fire hazards through the use of a fast response fusible link, 14.0, 16.8, or 25.2 nominal K-Factor, and special deflector. ESFR sprinklers are designed to produce high-momentum water droplets in a hemispherical pattern below the deflector. This permits penetration of the fire plume and direct wetting of the burning fuel surface while cooling the atmosphere early in the development of a high-challenge fire. Marked “ESFR” and “UPRIGHT” or “PEND”.

INTERMEDIATE LEVEL/RACK STORAGE SPRINKLER: A standard spray sprinkler assembly designed to protect its operating element from the spray of sprinklers installed at higher elevations. The assembly consists of a standard or large orifice upright or pendent sprinkler with an integral upright or pendent water shield and guard assembly. Use only those sprinklers that have been tested and listed for use with the assembly. Refer to the technical data page for allowable sprinkler models.

RESIDENTIAL SPRINKLER: A sprinkler intended for use in the following occupancies: one- and two-family dwellings with the fire protection sprinkler system installed in accordance with NFPA 13D; residential occupancies up to four stories in height with the fire protection system installed in accordance with NFPA 13R; and where allowed by the Authority Having Jurisdiction in residential portions of any occupancy with the fire protection system installed in accordance with NFPA 13.

The Viking Corporation, 210 N Industrial Park Drive, Hastings MI 49058
Telephone: 269-945-9501 Technical Services: 877-384-5464 Fax: 269-818-1680 Email: techsvcs@vikingcorp.com

Residential sprinklers have a unique distribution pattern and utilize a “fast response” heat sensitive operating element. They enhance survivability in the room of fire origin and are designed to provide a life safety environment for a minimum of ten minutes. For this reason, residential sprinklers must not be used to replace standard sprinklers unless tested for and approved by the Authority Having Jurisdiction. In addition to standard markings, the unit is identified as “RESIDENTIAL SPRINKLER” or “RES”.

4. INSTALLATION

Refer to appropriate NFPA Installation Standards.

5. OPERATION

Refer to the appropriate sprinkler technical data page(s).

6. INSPECTIONS, TESTS AND MAINTENANCE

Refer to NFPA 25 for Inspection, Testing and Maintenance requirements.

7. AVAILABILITY

Viking sprinklers are available through a network of domestic and international distributors. See The Viking Corporation web site for the closest distributor or contact The Viking Corporation.

8. GUARANTEE

For details of warranty, refer to Viking’s current list price schedule or contact Viking directly.

IMPORTANT: Always refer to Bulletin Form No. F_091699 - Care and Handling of Sprinklers and the appropriate sprinkler general care, installation, and maintenance guide. Viking sprinklers are to be installed in accordance with the latest edition of Viking technical data, the appropriate standards of NFPA, FM Global, LPCB, APSAD, VdS or other similar organizations, and also with the provisions of governmental codes, ordinances, and standards, whenever applicable. The sprinkler technical data page may contain installation requirements specific for the sprinkler model selected. The use of certain types of sprinklers may be limited due to occupancy and hazard. Refer to the Authority Having Jurisdiction prior to installation.

VIKING®	BULLETIN	REGULATORY AND HEALTH WARNINGS

The Viking Corporation, 210 N Industrial Park Drive, Hastings MI 49058
Telephone: 269-945-9501 Technical Services: 877-384-5464 Fax: 269-818-1680 Email: techsvcs@vikingcorp.com
Visit the Viking website for the latest edition of this technical data page www.vikinggroupinc.com

1. DESCRIPTION

Regulatory and Health Warnings applying to materials used in the manufacture and construction of fire protection products are provided herin as they relate to legally mandated jurisdictional regions.

⚠ WARNING
STATE OF CALIFORNIA, USA Installing or servicing fire protection products such as sprinklers, valves, piping etc. can expose you to chemicals including, but not limited to, lead, nickel, butadiene, titaninum dioxide, chromium, carbon black, and acrylonitrile which are known to the State of California to cause cancer or birth defects or other reproductive harm.
For more information, go to **www.P65Warnings.ca.gov**

2. WARRANTY TERMS AND CONDITIONS

For details of warranty, refer to Viking's current list price schedule at **www.vikinggroupinc.com** or contact Viking directly.