Trusted above all.™

VSF303 Multi Spectrum IR Flame Detector

Safety and Technical Manual

Viking Integrated Safety

WARNING: Cancer and Reproductive Harm-
www.P65Warnings.ca.gov

Read this manual prior to performing any task!

Viking Corporation
5150 Beltway Dr. SE
Caledonia MI 49316

Form No. F_020521 Rev 2.2

Ref: 3303.0001 Rev:3.1 ECN:4652

HELP US TO HELP YOU

Every effort has been made to ensure accuracy in the contents of our documents; however, Viking can assume no responsibility for any errors or omissions in our documents or their consequences. Viking would greatly appreciate being informed of any errors or omissions that may be found in our documents.

Please email Viking Technical Services at techsvcs@vikingcorp.com or call 1-877-354-5464. Please reference the Form No. and Rev shown in the upper right corner of this page.

THANK YOU

Contents

1 Introduction....5
1.1 Detector Features....5
2 Safety Instructions....6
2.1 Warnings....6
2.2 Cautions....6
2.3 Important Safety Notices....6
2.4 EN 54-part 10 Limitation of use....8
3 Installation....9
3.1 Detector Enclosure....9
3.2 Mounting & Orientation....9
3.3 Wiring Procedure....11
3.4 0-20mA Output....12
3.5 Relay Output....13
3.6 Internal Inter-connections....14
3.7 Installation Checklist....15
3.7.1 Mechanical....15
3.7.2 Electrical....16
4 System Design Guidelines....17
4.1 Power Supply....17
4.2 Cable Selection....17
4.3 DC Power....17
5 Application Guidelines....18
5.1 Positioning Requirements....18
5.2 Detection Coverage....18
5.3 Exposure to Flare Radiation....19
5.4 Optical Contamination....19
5.5 Enclosed Areas....19

This document is strictly private and confidential, reproduction without Viking Corporation approval is prohibited. © 2021 The Viking Group Inc.

5.6 Detector Sensitivity 19
5.7 Detector Alarm Delay 19
5.8 Ultra-Fast Mode 19
6 Maintenance and Commissioning 21
6.1 Procedure 21
6.2 Functional Testing 22
7 Fault Finding 23
7.1 Removal of the Electronics 23
7.2 Replacement of the Electronics 23
7.3 Diagnostics 23
7.4 LED Indication 24
7.5 Power Fault 25
8 Technical Specification 26
8.1 Detector Information 26
8.2 Electrical Specification 26
8.3 Mechanical Specification 26
8.4 Environmental Specification 27
8.5 Certification and Approvals 27
8.6 Operating Specification 27
8.7 VSF303 Detector Ordering Information 28
8.8 Detector Accessories and Spares 28
9 Appendix A - Acronyms, Terms & Abbreviations 29
10 Appendix B - Field of View 30
11 Appendix C - FM Approval Performance Report 31
12 Appendix D - IEC 61508 Functional Safety 34

This document is strictly private and confidential, reproduction without Viking Corporation approval is prohibited. © 2021 The Viking Group Inc.

1 Introduction

This safety and technical manual applies to the Viking Multi Spectrum IR3 Flame Detector (VSF303) hardware version 1.0 and above.

The Viking VSF303 is a triple IR flame detector. It uses three IR sensors, digital signal processing hardware and firmware algorithms to interpret the radiant characteristics of flame.

The Viking flame detection range are the safest and most advanced flame detectors on the market today. Our worldwide installed base has proven that the Viking technology is robust, even in the harshest of environments.

The FDS303 has an industry leading detection distance of 160 metres in high sensitivity setting, and a selectable 'Ultra-Fast' mode which reduces detection time to under 1 second (see section 5.7).

FM Approvals ensures that our flame detection firmware and hardware is fit for purpose through rigorous research and testing to a range of fire types and various potential false alarm stimuli. This testing proves that the VSF303 has an unsurpassed false alarm immunity.

The VSF303 has been designed for use in standalone operation.

1.1 Detector Features

- The VSF303 has a 90° cone of vision with an industry leading range of 160 metres to a 0.1m^2 pan fire of n-heptane (high sensitivity setting). Three detection sensitivity settings allow the user to select the sensitivity that is most suitable for their application.
- Superior false alarm immunity to common sources of unwanted alarms such as hot process and hot work.
- Advanced optical verification test assuring readiness to perform when needed.
- Outputs include both relay contacts and 0-20mA.
- Separate termination chamber for ease of installation.
- Certified Flame Simulator VSF3008 ITEST verifies operation from distances of 10 to 26 ft (3 to 8 m).
- VSF303 can operate via a standard 3 or 4 wire termination.
- Microprocessor controlled heated optics increases resistance to moisture and ice.
- Selectable 'Ultra-Fast' mode for detection in <1 second (see section 5.8).

This document is strictly private and confidential, reproduction without Viking Corporation approval is prohibited. © 2021 The Viking Group Inc.

2 Safety Instructions

For the correct and effective use of this equipment, to maintain safety and avoid hazards it is essential that you read and understand these instructions fully and act accordingly BEFORE installing, operating, or maintaining the equipment.

PAY ATTENTION TO ALL SAFETY WARNINGS AND CAUTIONS

2.1 Warnings

This equipment is certified and intended for use in potentially hazardous areas. Install and use the equipment in accordance with the latest regulations. The end user shall close any unused entries using suitably certified blanking elements to maintain the housing's type of protection.

For European (ATEX) installations IEC/EN60079-14 'Electrical Installations in Hazardous Areas' and IEC/EN60079-17 'Inspection and Maintenance in Hazardous Areas' should be strictly observed. The IR3 type flame detector; Viking VSF303, is to be installed in places where there is a low risk of mechanical damage.

For installations in North America the National Electrical Code (NEC) should be strictly observed. In other countries the appropriate local or national regulations should be observed.

The equipment must be properly earthed to protect against electrical shock and minimize electrical interference.

Do not drill holes in any housing or enclosure as this will invalidate the explosion protection. Ensure that the enclosure lid is fully tightened and locked into position before energizing the equipment.

Do not open the enclosure in the presence of an explosive atmosphere.

All permits and proper site procedures and practices must be followed, and the equipment must be isolated from the power supply before opening the enclosure in the field.

Operators must be properly trained and aware of what actions to take in the event of a fire being detected.

Cable to be used for installation is to be selected with a temperature rating of greater than 77 °F (25 °C) above the maximum ambient temperature. The metric cable entries are fitted with an internal stop. This will result in threads of the cable gland being visible. Do not overtighten.

2.2 Cautions

Use only approved parts and accessories with this equipment.

Do not attempt to replace the window as the sapphire and the front cover are individually matched pairs to meet the stringent requirement of the hazardous area certification.

The threaded portions of the detector are flame paths. These threads and the flame paths are not to be repaired.

To maintain safety standards, commissioning and regular maintenance should be performed by a qualified person.

2.3 Important Safety Notices

Pay attention to the guidelines given throughout this document. If in any doubt about the instructions listed within this manual, then please contact Viking.

This document is strictly private and confidential, reproduction without Viking Corporation approval is prohibited. © 2021 The Viking Group Inc.

Viking takes no responsibility for installation and/or use of its equipment if it is not in accordance with the appropriate issue and/or amendment of the manual. Viking reserve the right to change or revise the information contained herein without notice and without obligation to notify any person or organization of such action.

Only those parameters and configurations highlighted with the FM diamond (FM APPROVED) have been tested and approved by Factory Mutual.

Warning

Do not open the detector assembly in a hazardous area. The detector contains limited serviceable components and should only be opened by trained personnel.

Caution

The wiring procedures in this manual are intended to ensure functionality of the device under normal conditions. Due to the many variations in wiring codes and regulations, total compliance to these ordinances cannot be guaranteed. Be certain that all wiring complies with all local ordinances. If in doubt, consult the authority having jurisdiction before wiring the system. Installation must be done by trained personnel.

Caution

To prevent unwanted actuation or alarm, extinguishing devices must be inhibited/isolated prior to performance testing or maintenance.

Detector Orientation

Detectors should be mounted with the earth stud directly below the lens.

Detector Positioning

Detectors should be positioned to provide the best unobstructed view of the area to be protected.

The following factors should also be taken into consideration:

Identify all high-risk fire ignition sources. Ensure that enough detectors are used to adequately cover the hazardous area.

Locate and position the detector so that the fire hazard(s) are within both the field of view and detection range of the device.

For best performance, the detector should be mounted on a rigid surface in a low vibration area.

Extremely dense fog or blizzard conditions could eventually block the vision of the detector.

For indoor applications, if dense smoke is expected to accumulate at the onset of a fire, mount the detector on a side wall approximately 3 to 6 ft (1 to 2 m) below the ceiling.

The VSF303 has three sensitivity settings, which may be changed via a Viking application.

If utilizing the Ultra-Fast mode setting, this applies to the high sensitivity setting only.

The flame detector carries out continuous internal hardware diagnostic testing to ensure correct operation is relayed to the control system.

The VSF303 is not designed to annunciate diagnostic failure of signal returns via external wiring. Control systems and fire panels generally have fault monitoring for such an eventuality.

This document is strictly private and confidential, reproduction without Viking Corporation approval is prohibited. © 2021 The Viking Group Inc.

2.4 EN 54-part 10 Limitation of use

The VSF303 is not approved for use in oxygen-enriched atmospheres.

As the VSF303 responds to flame, it cannot be used in locations where flare stacks are within its field of view or a reflected view is present without triggering alarms.

As the VSF303 responds to CO_2 emissions of a flame the VSF303 cannot detect non-hydrocarbon fires, such as those using pure hydrogen, silane, and sulphur as fuel.

The sensitivity of the VSF303 is reduced by obscurants such as smoke, fog, and other airborne particulates. The VSF303 may be blinded by extremely dense obscurants.

Arc welding should not take place within 32 ft (10 m) of the VSF303 when using the highest sensitivity setting.

This document is strictly private and confidential, reproduction without Viking Corporation approval is prohibited. © 2021 The Viking Group Inc.

3 Installation

The VSF303 design has been developed to allow simple installation. The detector comprises two key components, the detector enclosure, and the detector internal assembly. The detector assembly located in the front of the enclosure should not be removed except by trained personnel. Unauthorized removal or disassembly of the detector assembly will invalidate the warranty. Only the rear end cap can be removed for terminal access.

3.1 Detector Enclosure

The detector electronics are housed in an enclosure certified for use in hazardous areas. For the exact certification and conditions of use see certification label on the device, or the example drawing below:

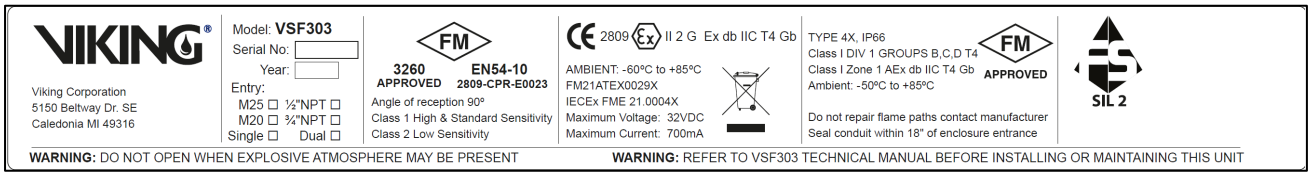

Long Enclosure Label (example)

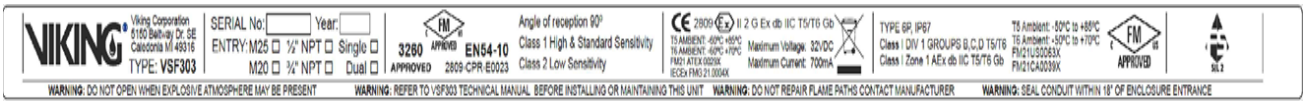

Short Enclosure Label (example)

The detector comprises the front window cover including the window, the rear enclosure cover, the enclosure body, certification rating label (see above) and the mounting bracket.

The flame detector is supplied preassembled and includes the mounting bracket. However, it is not supplied with a mounting support and fixings, cabling, or glands.

3.2 Mounting & Orientation

The mounting bracket allows the detector's vertical orientation to be adjusted from 0 to 45° and allows a horizontal rotation of +/-45° when mounted from above.

Figure 1: Detector Mounting Bracket

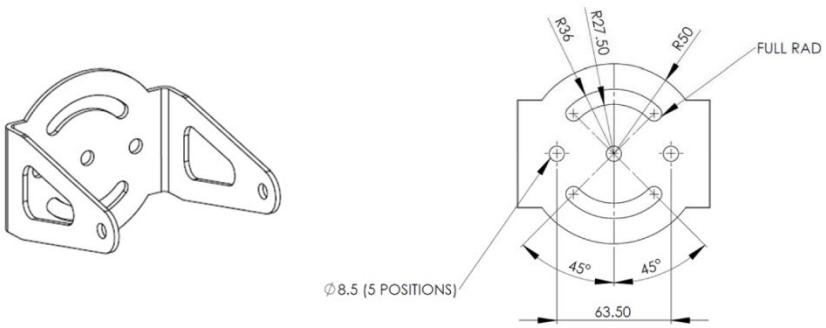

This document is strictly private and confidential, reproduction without Viking Corporation approval is prohibited. © 2021 The Viking Group Inc.

Figure 2: Ceiling Mount

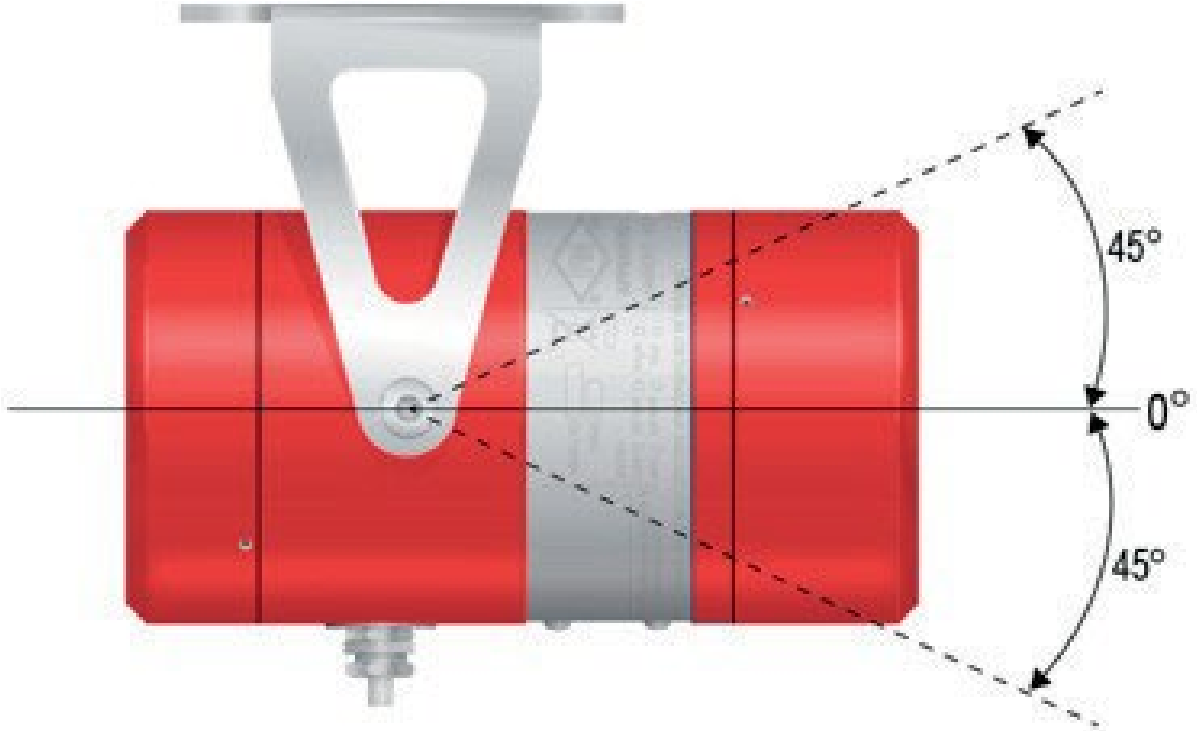

Figure 3: Wall Mount

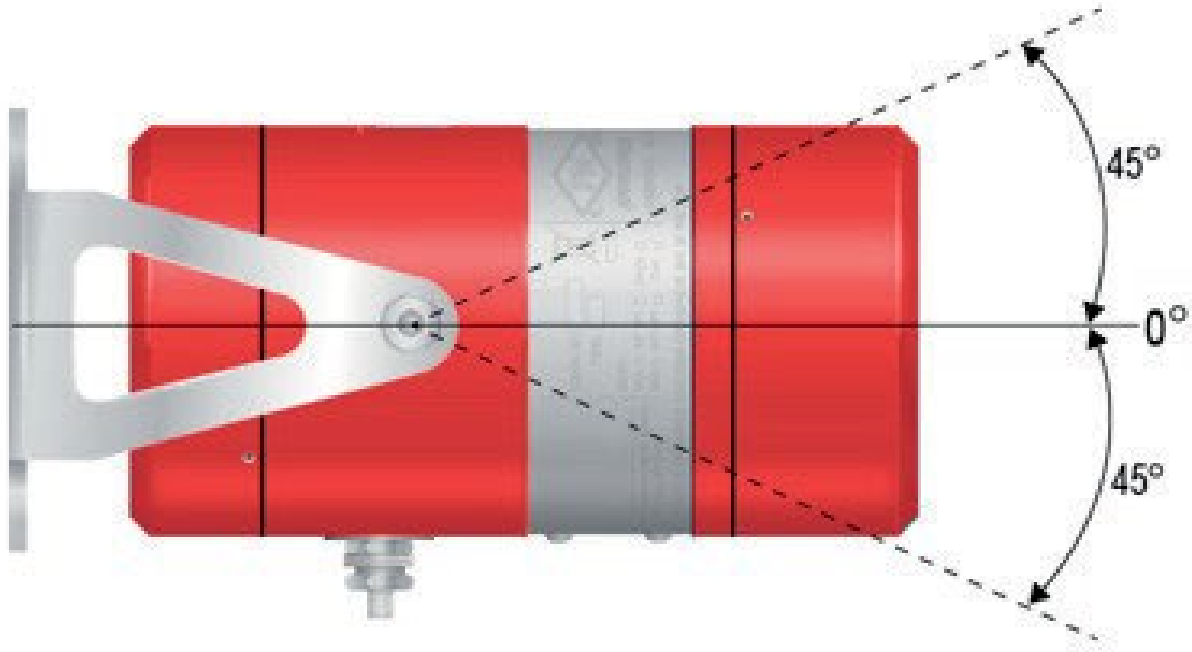

Firm, vibration free mountings are essential for trouble free operation of optical systems, and the detector should be fixed to a rigid mounting. When mounting on a wall in this orientation allow for the cable gland and cable as this may restrict the downward rotation of the detector.

This document is strictly private and confidential, reproduction without Viking Corporation approval is prohibited. © 2021 The Viking Group Inc.

3.3 Wiring Procedure

The wiring terminals are in the rear section of the detector enclosure and are accessible by removing the end cap.

The front section of the enclosure should only be accessed by trained personnel.

The terminal schematic detailed below shows the view looking inside the detector following removal of the end cap.

Figure 4: Terminal Schematic

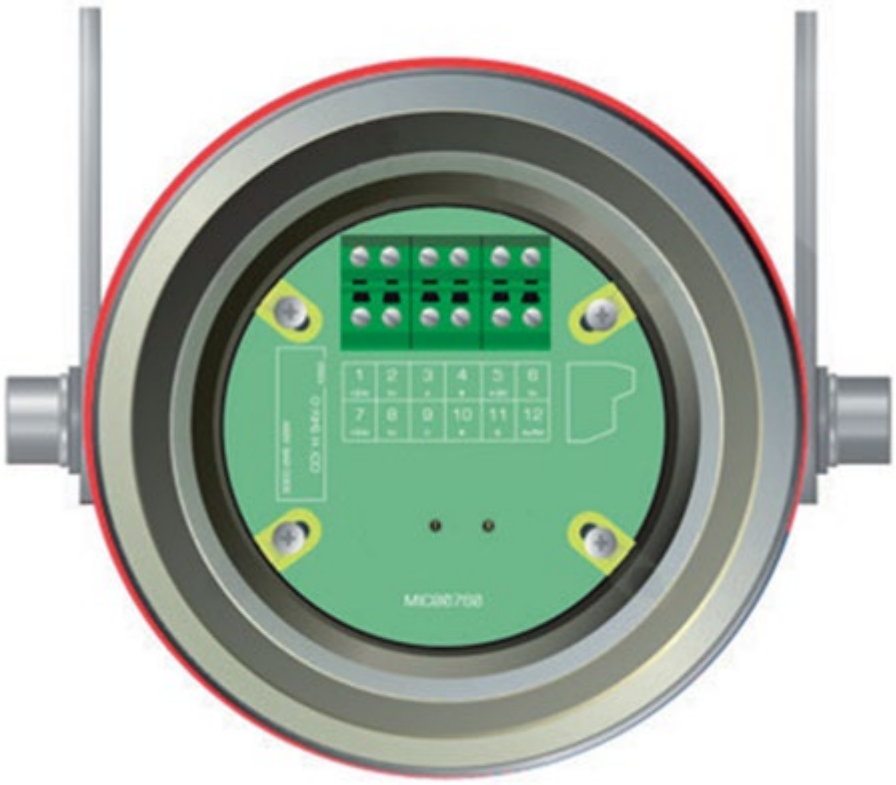

The detector has two types of alarm output available simultaneously.

- 0-20mA (source non-isolated)
- Relay (Alarm & Fault)

Listed below are wiring options dependent on the functional requirements of the detector.

This document is strictly private and confidential, reproduction without Viking Corporation approval is prohibited. © 2021 The Viking Group Inc.

3.4 0-20mA Output

The following wiring connection diagram shows correct wiring of the detector when a 0-20mA output is required.

Figure 5: 3 Wire Termination

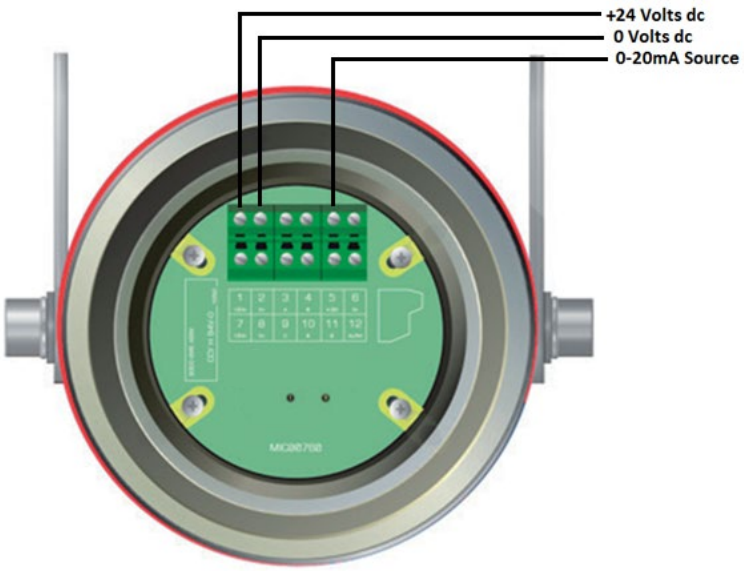

Factory Fixed Values

Current Output	Event
0mA	Power/Detector Fault
1mA	Low Supply Voltage Fault
1.5mA	Optical Fault
4mA	Healthy
18mA	Alarm
21mA	Over-range

Notes:
Note 1 - The tolerance on the above outputs is +/- 0.3mA current with a maximum loop resistance of 500 ohms.
Note 2 – Additional 0-20mA values are configurable and must be specified when ordering if required. The optical fault signal may be configured at 2mA as opposed to 1.5mA and the alarm signal may be increased to 20mA.
Note 3 - The VSF303 can be factory-configured with an Aux alarm delay (20mA) of between 0 and 10 seconds in 1 second steps over and above the normal response times of the 18mA alarm signal. If the Aux alarm signal is delayed, the 18mA alarm signal will precede the 20mA signal giving the normal response times as tested by Factory Mutual to FM3260. If the 20mA alarm signal is delayed, it is considered an Aux alarm level.
Note 4 – The 0-20mA signal has HART ® 7 protocol superimposed on top of it to give access to more diagnostic information. See HART ® 7 Technical Note.

This document is strictly private and confidential, reproduction without Viking Corporation approval is prohibited. © 2021 The Viking Group Inc.

3.5 Relay Output

The following wiring connection diagrams shows wiring the detector when a relay output is required. Reversal of polarity across terminals 1 & 2 enables Viking RS485 communication on terminals 3 & 4. This communication protocol, when used with Viking applications, allows configuration changes to the detector.

Figure 6: Relay Configuration Termination

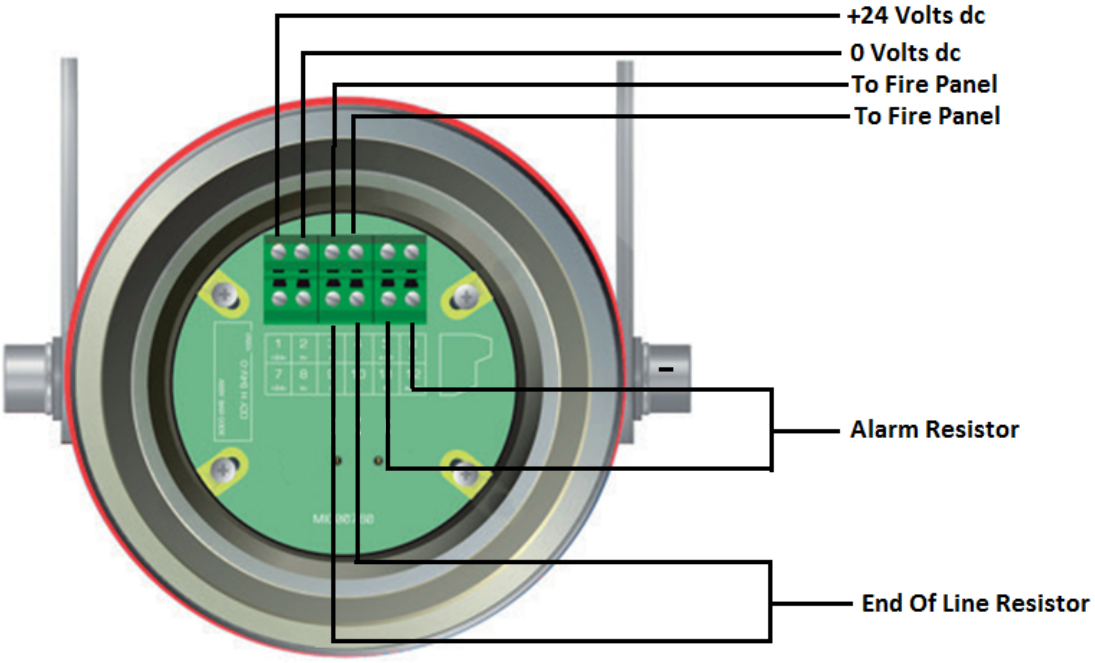

NOTE: EOL and alarm resistors values are defined by the client and the control system/fire panel which the detectors are being integrated into.

This document is strictly private and confidential, reproduction without Viking Corporation approval is prohibited. © 2021 The Viking Group Inc.

3.6 Internal Inter-connections

The following diagram shows the internal inter-connections of the alarm and fault relay contacts and jumpers. Each field connection is listed on this diagram for clarity.

Figure 7: VSF303 Internal Inter-connections

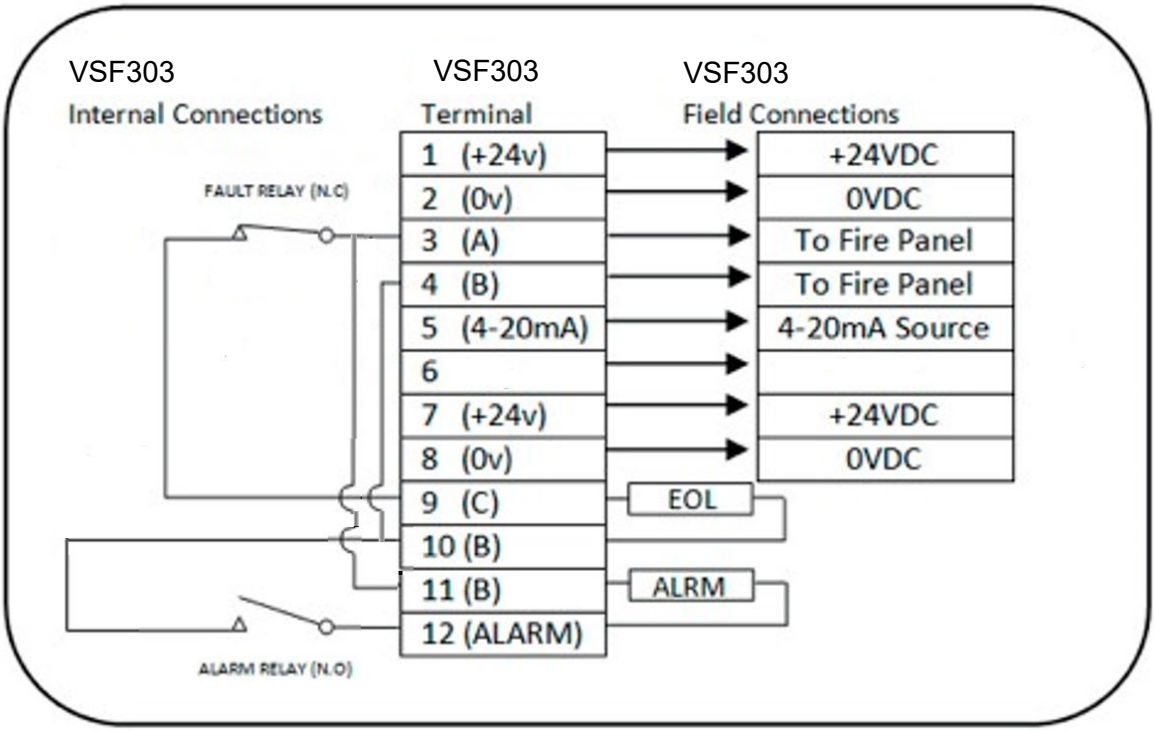

This document is strictly private and confidential, reproduction without Viking Corporation approval is prohibited. © 2021 The Viking Group Inc.

3.7 Installation Checklist

Experience has shown that poor installation and commissioning practice may result in an unreliable fire detection system that fails to meet the site performance targets. Before installing the detector, it is important to consider where it is to be located and how it is to be mounted. To maintain compliance with the EMC regulations it is essential the electrical installation be engineered correctly.

3.7.1 Mechanical

Notes	When locating the detector consideration should be given to maintenance access to the detector. The detector mounting should be secure and vibration free. It is advisable to check the detection locations prior to fabrication of the mounting supports, as changes are frequently made during construction at site which can affect detector coverage. The installation should allow space for subsequent detector removal, for maintenance or repair, to be easily achieved.
1	The detector should be fixed to a stable supporting structure using the mounting bracket provided. The supporting structure must allow for horizontal adjustment of the detector orientation. The support structure should be in place prior to detector installation. Information on mounting is available from Viking.
2	The threaded flame path of the enclosure cover and body must be protected from damage during installation. Any such damage can destroy the validity of the enclosure.
3	The detector electronics shall be protected from mechanical damage and external sources of EMI such as X-rays, RFI and electrostatic discharge. The detector should not face directly towards the sun.
4	Fit the mounting bracket to the support structure using 5/16-inch (8 mm) bolts (not provided). The detector (bracket) should be oriented to provide the desired coverage.
5	The detector enclosure body should be fitted to the mounting bracket. The bolts locate into the bracket. Twist the enclosure to locate the bolts; these are then tightened using a 6mm Allen key.
6	Ensure the detector is orientated such that the earthing stud is directly beneath the lens.
7	Glanding should be carried out by trained personnel. The gland should be fitted in line with installation standards for potentially explosive atmospheres that is 5 full threads minimum with the IP seal washer fitted at the bottom of the thread. This sealing arrangement will result in several threads of the cable gland being visible. The gland should be torqued between 11 to 15 lb. ft (15 to 20 N m). Note – The IP seal washer only applies to metric threads.

This document is strictly private and confidential, reproduction without Viking Corporation approval is prohibited. © 2021 The Viking Group Inc.

3.7.2 Electrical

Notes	It is advisable to check the detection locations, prior to fabrication of the mounting supports, as changes are frequently made during construction at site. Detector cabling must be segregated from cables carrying high-speed data or high energy and/or high frequency signals and other forms of electrical interference. The detector requires a clear unobstructed view of the local hazard. To avoid local obstructions, such as pipework and cable trays, a 6 ft (2 m) helix should be allowed in the detector cabling. The detector should only be fitted just prior to commissioning the detector. Experience shows that the detector can be damaged due to cable testing operations (Insulation Tests, etc.).
1	Isolate all associated power supplies. Ensure that they remain OFF until required for commissioning.
2	The threaded flame path of the enclosure cover and body must be protected from damage during installation. Any such damage can destroy the validity of the enclosure.
3	The electronics subassembly shall be protected from mechanical damage and external sources of EMI such as X-rays, RFI and electrostatic discharge.
4	The enclosures external earth stud should be connected to a local earth point.
5	Remove the transit plug(s) from the enclosure body gland entries.
6	Fit approved cable glands.

This document is strictly private and confidential, reproduction without Viking Corporation approval is prohibited. © 2021 The Viking Group Inc.

4 System Design Guidelines

The following guidelines are intended to assist with the electrical design and engineering of systems where it is intended that flame detectors will be used.

4.1 Power Supply

The detector requires an absolute minimum supply voltage of 18Vdc, as measured at the detector terminals. The system power supply voltage and power distribution should be arranged such that on the longest cable run the detector(s) has a supply voltage of greater than 18Vdc.

4.2 Cable Selection

Cable to be used for installation is to be selected with a temperature rating of greater than 77 °F (25 °C) above the maximum ambient temperature.

The metric cable entries are fitted with an internal stop. This internal stop has an IP washer mounted directly above it. Ensure this is fitted to maintain the ingress protection. This will result in threads of the cable gland being visible. Do not overtighten.

The installation and local regulations and standards determine the overall cable specification. This section specifies suitable cable characteristics to ensure correct operation of the flame detector.

4.3 DC Power

NOTE: Table 2 shows an absolute maximum for cable length; try not to approach this value.

DO NOT ground any cable shields at the detector housing.

Table 2: Maximum Cable Lengths (24Vdc supply)

Installation based on 24V nominal supply	Number of Flame Detectors	Maximum Power (W)	Maximum Cable Length (m) with 1.5mm2 Conductors (12Ω/km)	Maximum Cable Length (m)with 2.5mm2 Conductors (7.6Ω/km)
Heater on	1	12W @ 24Vdc	500	780
Heater off	1	3W @ 24Vdc	2000	3000

Table 3: AWG Conversions

Cross Sectional Area (mm^2)	American Wire Gauge (AWG)	Typical Conductor Resistance per km (3280 ft.) DC Ω/km @ 20°C (Approx.)
0.5	22	36
1.0	18	19
1.5	16	12
2.5	14	7.6

This document is strictly private and confidential, reproduction without Viking Corporation approval is prohibited. © 2021 The Viking Group Inc.

5 Application Guidelines

In considering the application of the detector it is important to know of any conditions that may prevent the detector from responding. The detector provides reliable response to hydrocarbon flames within its field of view, and insensitivity to common false alarm sources. Solid obstructions or a direct view of intense light sources may result in a reduction in the coverage and/or a reduction in the detector sensitivity. Scaffolding or tarpaulins in the detector's field of view may reduce coverage. Contamination of the detector window may result in a reduction in sensitivity.

The detector has a 90° conical field of view. The location and orientation of the detector in relation to the protected area determines the actual footprint. Achieving the desired coverage depends on congestion within the protected space, the location of the detector(s) and the distance of the detector from the hazard. It may be necessary to install more than one detector within an area to achieve adequate coverage.

The detector sensitivity, expressed as fire size at a distance, is determined by the radiant heat output of the fire. This is a function of the fuel source, how it is released and distance from the detector to the fire.

In common with other forms of flame detection the detector's sensitivity is reduced and potentially blinded by dense obscurants such as smoke, fog, and other airborne particulates. The detector is insensitive to arc welding; however, this should not be conducted within 32 ft (10 m) of the detector.

5.1 Positioning Requirements

The following guidelines have been based on operational feedback, reflecting commonly experienced problems which can be traced to a failure to observe the following:

- Ensure the mounting position is free from vibration or movement.
- Prevent accidental knocking or forcing out of alignment.
- Isolate as far as possible from local electrical interference sources.
- Ensure sufficient detection to achieve adequate coverage for all likely hazards.
- Minimize exposure to contamination of the detector face plate.
- Ensure ease of maintenance access to detector (i.e., direct ladder or scaffold access).
- Do not allow the VSF303 to have direct view of hot surfaces.
- Ensure that the VSF303 has no direct view or reflected view of a friendly fire.
- The detector should be aimed downward by at least 10° to 20°.

All these issues are of crucial importance to successful installation, and they should be afforded great attention during the detailed design, construction, and commissioning phases of the work.

5.2 Detection Coverage

Detector locations can be chosen from computer models or from site surveys. The detectors should be aligned to view the intended hazard considering any obstruction and congestion. Software analysis of the actual detector coverage may be required to ensure adequate coverage of the hazards. This analysis can also be used to optimize the number of detectors and the loop configuration. The cones of vision are detailed in Appendix B.

This document is strictly private and confidential, reproduction without Viking Corporation approval is prohibited. © 2021 The Viking Group Inc.

5.3 Exposure to Flare Radiation

Flame detectors are frequently used where hydrocarbon fire hazards are expected; these are quite often processing plants where a flare stack is in use nearby. The detector shall not have a direct view of the flare or a reflected view of the flare.

5.4 Optical Contamination

There are many sources of contamination such as oil, water (deluge water, rain, and sea-spray), snow, ice, and internal misting. Excessive contamination of the detector faceplate may result in an increased maintenance requirement and potentially reduce the detector's sensitivity. Where detectors are mounted at low level, care should be taken to avoid contamination (such as water and oil) from equipment above the detector. Care should be taken in sighting the detector to minimize the likelihood of such contamination. The detector is designed such that an optical fault is generated when half of the detection range remains. This is indicated by the fault output and is evident by the yellow color of the LED on the face of the detector. The optical fault condition indicates that the detector requires cleaning or service. The optical fault indication is self-clearing.

5.5 Enclosed Areas

In enclosed areas, if dense smoke is expected to accumulate at the onset of the fire, the detector should be mounted 3 to 6 ft (1 to 2 m) below the ceiling level.

5.6 Detector Sensitivity

The detector's response to a fire is a function of the fuel source and how it is released, fire size and distance, orientation to the detector and local ambient conditions. The typical figures are based on in-house tests except when marked with the FM logo, these tests were conducted and certified by Factory Mutual. As with all tests, the results must be interpreted according to the individual application considering all possible variables.

The detector's sensitivity to different fuel sources is dependent on the radiant heat output of the flame and the detectors' typical response is shown below (see table 4). The detector will only detect hydrocarbon fires.

5.7 Detector Alarm Delay

The Detector can be factory configured with an Aux alarm delay (20mA) of between 0 and 10 seconds in 1 second steps over and above the normal response times of the 18mA alarm signal. If the Aux alarm signal is delayed the 18mA alarm signal will precede the 20mA signal giving the normal response times as tested by Factory Mutual to FM3260. The 20mA alarm signal if delayed is considered an Aux alarm level.

5.8 Ultra-Fast Mode

Enabling Ultra-Fast Mode will reduce detection time to under 1 second. This is only for use in applications where rapid detection is critical for safety. This setting significantly decreases false alarm discrimination and should only be used in stable, well-defined environments. Use of this mode outside controlled conditions may result in spurious alarms.

Ultra-Fast mode applies to the high sensitivity setting only. Note that if the Ultra-Fast setting is enabled then disabled, the device will remain in high sensitivity setting – if medium (default) or low sensitivity is required, this must be reselected manually.

This document is strictly private and confidential, reproduction without Viking Corporation approval is prohibited. © 2021 The Viking Group Inc.

Table 4: Typical VSF303 Response Characteristics High sensitivity (200 ft (60 m)). For all FM approved results see Appendix D

Fuel	Fire Size	Distance	FM
Methane Fire	2 ft (0.6 m) plume height	165 ft (50 m)	FM APPROVED
Methane Fire (ultra-fast mode)	3 ft (0.9m) plume height	40m (131 feet)	FM APPROVED
Ethanol Fire	1ft^2 (0.1m^2) pan	136 ft (42 m)	FM APPROVED
Diesel Fire	1ft^2 (0.1m^2) pan	165 ft (50 m)	
Crude Oil (heavy fuel oil) Fire	1ft^2 (0.1m^2) pan	165 ft (50 m)	
Wax Inhibitor (Clear 10) Fire	1ft^2 (0.1m^2) pan	165 ft (50 m)	
Anti-Foam (Surflo AF-300) Fire	1ft^2 (0.1m^2) pan	165 ft (50 m)	
Wood Stack Fire	1ft^2 (0.1m^2) pan	165 ft (50 m)	
n-heptane Fire	1ft^2 (0.1m^2) pan	200 ft (60 m)	FM APPROVED
n-heptane Fire (inverse square law)	4.5" x 4.5" pan	200 ft (60 m) actual 525 ft (160 m) actual	FM APPROVED
n-heptane Fire in direct sunlight	1ft^2 (0.1m^2) pan	200 ft (60 m)	FM APPROVED
n-heptane Fire in modulated sunlight	1ft^2 (0.1m^2) pan	200 ft (60 m)	FM APPROVED
n-heptane Fire in the presence of Arc welding	1ft^2 (0.1m^2) pan	200 ft (60 m)	FM APPROVED
n-heptane Fire in the presence of a 500-Watt lamp	1ft^2 (0.1m^2) pan	200 ft (60 m)	FM APPROVED
Gasoline Fire	1ft^2 (0.1m^2) pan	200 ft (60 m)	
JP4 Fire	1ft^2 (0.1m^2) pan	200 ft (60 m)	FM APPROVED
Methanol Fire	1ft^2 (0.1m^2) pan	136 ft (42 m)	
Jet A-1 Fire	1ft^2 (0.1m^2) pan	115 ft (35 m)	

This document is strictly private and confidential, reproduction without Viking Corporation approval is prohibited. © 2021 The Viking Group Inc.

6 Maintenance and Commissioning

6.1 Procedure

This maintenance schedule/ commissioning procedure is intended for guidance only. The actual level of maintenance required will depend on the severity of the operating environment and the likelihood of damage or the rate of contamination from oil, sea spray, deluge system etc. It is advisable to regularly review maintenance reports and adapt the maintenance period to the operating environment.

Step	Periodic Inspection and Maintenance	Suggested Interval
1 - 6	General Inspection and maintenance of the detector and faceplate.	6 Monthly
6 - 14	Specific inspection and maintenance of the detector enclosure.	12 Monthly
15	Detector function testing.	6 Monthly
1 – 5 15 - 17	Commissioning Procedure.	Post Installation
Step	**Activity**	**Key Points**
1	Detectors that require maintenance / commissioning should be taken offline and inhibited. Detectors which require to be opened will need to be isolated electrically.	Ensure that panel wiring, and terminations associated with all units under test are in good order.
2	Ensure that the detector mounting arrangements are secure and undamaged.	
3	Ensure that the detector enclosure is intact and undamaged.	
4	Ensure that all associated cables and glands are correctly made up, secure and undamaged.	
5	Clean the enclosure faceplate (outside) with a mild detergent solution and a soft cloth until the window is clear of all contamination. Wash the window thoroughly with clean water and dry with a clean lint free cloth or tissue. **Note: This MUST be carried out prior to initial powering of the device. The VSF303 will carry out an automatic Optical Test Calibration at this point.**	Assess requirement for opening the enclosure, for maintenance or cleaning, follow steps 6 to 14.
6	Open the detector enclosure if required, by removing the enclosure cover. This exposes the enclosure flame path and detector lens.	Avoid damage to the flame path, faceplate, and lens.
7	Clean the enclosure cover and body flame paths with a dry clean cloth to remove and contamination. If the flame path or threads are badly pitted the components should be replaced.	
8	Check the 'O' ring seal on the enclosure cover is not damaged or perished, replace as required. Note the ingress protection is compromised if the seal is not correct.	
9	Clean the enclosure faceplate (inside) with a mild detergent solution and a soft cloth until the window is clear of all contamination. Wash the window thoroughly with clean water and dry with a clean lint free cloth or tissue.	
10	Non–setting waterproof grease should be evenly applied to the flame path on both the enclosure cover and body.	
11	Clean the detector lens. This should be done with a soft, dry, and clean cloth.	Avoid touching the optics or electronics.
12	Clean the detector enclosure faceplate. Use a degreasing agent on the outside to remove deposits.	
13	The enclosure cover must be screwed on to a minimum of 5 full turns or until fully tight and secured using the locking screw provided.	
14	Reinstate the detector back into service.	
15	Ensure that inhibits are applied, then, using the flame test torch, function test the detector. Note the detector LED indicator, within the detector housing, changes color to RED. Check the mA output is indicating 18mA.	Check the complete display system for correct function and indication.

This document is strictly private and confidential, reproduction without Viking Corporation approval is prohibited. © 2021 The Viking Group Inc.

16	Isolate the power to the detector and ensure a fault is initiated within the control system. Check the mA output is indicating 0mA.	
17	De-isolate the detector and ensure the status LED indicates green. Reinstate the detector back into service. Check the mA output is indicating 4mA.	

6.2 Functional Testing

The detector can be function tested using the VSF3008 ITEST Flame Simulator, which has been specifically designed to provide a convenient means of field testing the detector. Refer to the VSF3008 ITEST Flame Simulator user manual for instructions on its use.

In the unlikely event of the detector failing to respond to the VSF3008 ITEST Flame Simulator please contact Viking technical support. Please ensure that the flame detector and flame simulator are being used correctly in the first instance by referring to their manuals.

This document is strictly private and confidential, reproduction without Viking Corporation approval is prohibited. © 2021 The Viking Group Inc.

7 Fault Finding

7.1 Removal of the Electronics

Warning there are no user replaceable parts within the electronic module. Any attempt to repair or dismantle the electronic sub-assemblies will void the warranty. If any fault is suspected within the electronics module the module is to be returned to Viking for investigation and repair if required. Any faults should be reported to Viking as per the instruction in section 6.2.

Removal of the electronics should only be performed by competent personnel. The following is the procedure for removal of the electronic module: -

1. Loosen the Allen screw that secures the lens cap to the housing.
2. Un-screw the lens cap assembly and remove.
3. Gently un-screw the three screws indicated until they freely turn. Please note these screws are not removable.
4. Grasp the two screws positioned at the bottom of the detector and pull the electronics module out of its housing.

7.2 Replacement of the Electronics

The following is the procedure for installation of the electronic module: -

1. Insert the electronic module with the center sensor positioned at the top of the housing.
2. Rotate the module clockwise and anticlockwise until the locating pins click into position.
3. Push the electronics assembly into the housing until the face plate is flush with the front of the housing. Note: This should take minimum force if the locating pins are in position.
4. Gently screw the three screws until they bottom. Note: Do not overtighten.
5. Grease and replace the lens cap.
6. Tighten the lens cap Allen locking screw.

7.3 Diagnostics

It is impossible to provide fault diagnostics for every possible detector fault. In all cases it is advised that the following best practice is followed:

1. Only make one change at a time (changing more than one thing makes diagnosis very difficult).
2. Check the most obvious possible cause first.
3. Work systematically through the problem.
4. Keep good notes on the original problem, each step taken, and the results observed.

This document is strictly private and confidential, reproduction without Viking Corporation approval is prohibited. © 2021 The Viking Group Inc.

7.4 LED Indication

The detector LED indicator is used to reveal the detectors current state, as shown below:

Figure 9: VSF303 Fascia - Status LED

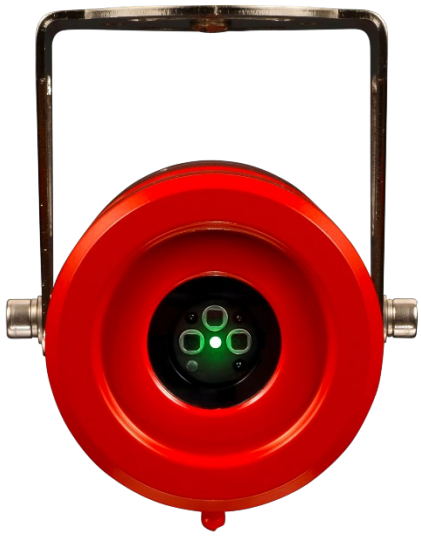

Table 5: LED Status Diagnostic Chart

LED Color	Status	Indicator
Green	Healthy	
Steady OFF	No Power/Major Internal Fault	
Steady Yellow	Fault	
Flashing Yellow	OV Fault (Firmware 1.17 and above)	
Red	Alarm	
One yellow flash at start-up	The VSF303 is set to low sensitivity (50 ft (15 m))	
Two yellow flashes at start-up	The VSF303 is set to standard sensitivity (100 ft (30 m))	
Four yellow flashes at start-up	The VSF303 is set to high sensitivity (200 ft (160 m))	

This document is strictly private and confidential, reproduction without Viking Corporation approval is prohibited. © 2021 The Viking Group Inc.

7.5 Power Fault

If the detector LED indicator is OFF or flashing then there may be a power supply fault, as shown below:

Figure 10: Power Supply Diagnostic Chart

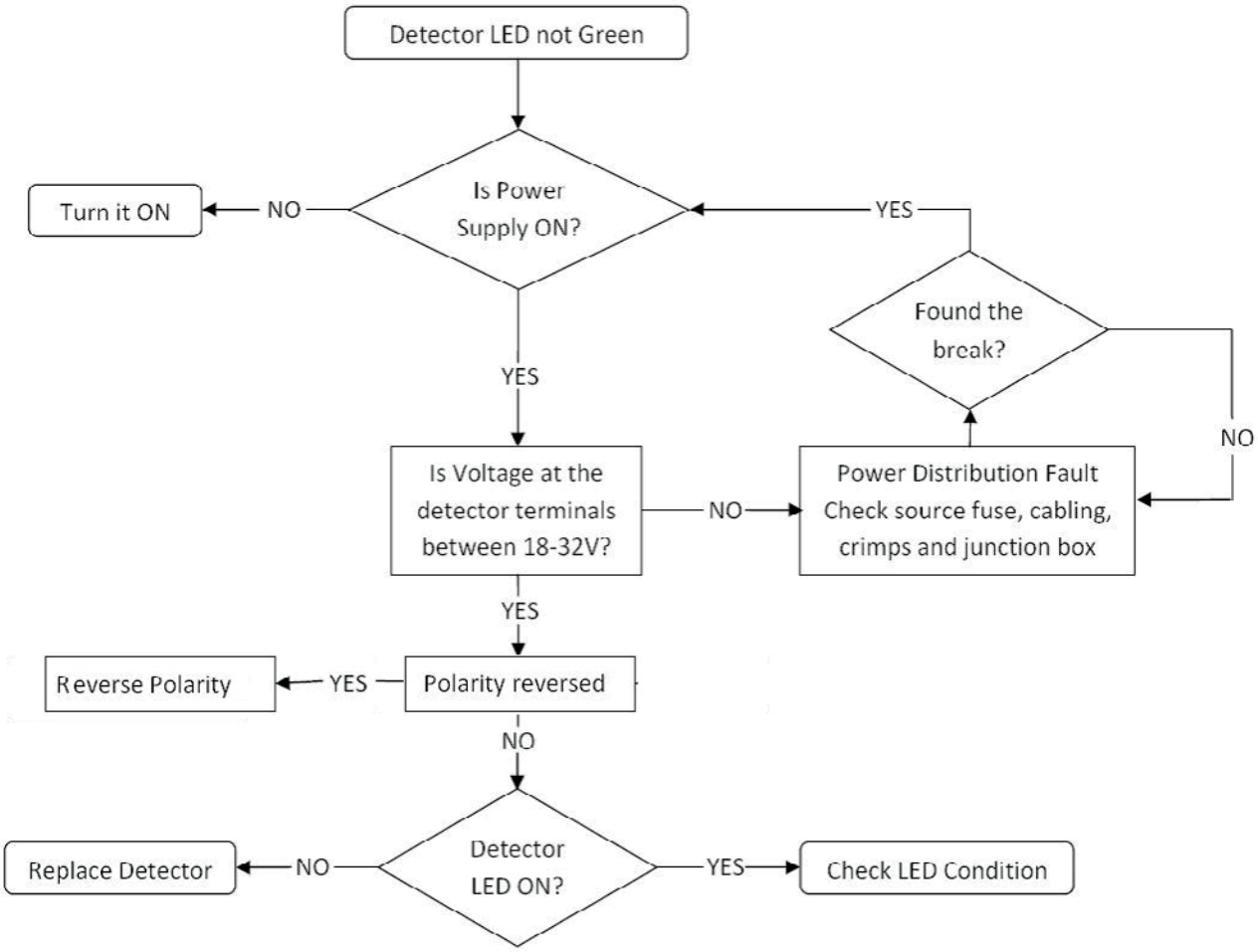

When investigating power supply faults, it is important to check that all voltages are within the detectors operating range (18V to 32V) under full load conditions as the voltages measured under no load conditions can be misleading.

This document is strictly private and confidential, reproduction without Viking Corporation approval is prohibited. © 2021 The Viking Group Inc.

8 Technical Specification

8.1 Detector Information

Parameter	Value
Model	Viking MSIR flame detector VSF303
Type	Triple IR Flame Detector – IR3
Spectral Range	Three wavelengths in the range of 3 µm to 8 µm
Application	Flame / fire detection of hydrocarbon fires only

8.2 Electrical Specification

Parameter	Units	Min	Nominal	Max	Comment
Supply Voltage	Vdc	18	24	32	Inc. ripple
Supply Ripple	Vpk-pk	1.0	1.0	1.0	
Detector Power Consumption no heaters	W	3	3	3	
Detector Power Consumption with heaters	W	12	12	12	
Detector shutdown voltage (low supply)	Vdc	<18			

8.3 Mechanical Specification

Parameter	Units	Value		Comment
Enclosure				
Overall Dimensions (Long) Enclosure	mm inches	100 Diameter x 200 Length 4 Diameter x 8 Length		
Overall Dimensions (Short) Enclosure	mm inches	100 Diameter x 145 Length 4 Diameter x 6 Length		
Shipping Weight (Long) Enclosure	lbs. Kg	5.5 2.5	13.2 6	
Shipping Weight (Short) Enclosure	lbs. Kg	4.5 2	10 4.5	
Material		6082 T6 Aluminum	316SS	
Coating	Color	Red Powder Coated Finish		
Cable Entries	mm/inches	Dual M25, Dual ¾ NPT. Single ¾ NPT		Other variants on request
Terminal Wire Size	mm^2/ AWG	2.5 / 14		
Ingress Protection		NEMA 6P (IP67)		
Mounting Bracket		See figure 1 Mounting Bracket Page 8		
Support Fixings	mm	2 x M8		
Vertical Adjustment	Degrees	0 to 45		
Horizontal Adjustment	Degrees	0		Provided by support
Axial (horizontal) Rotation	Degrees	+/- 45		

This document is strictly private and confidential, reproduction without Viking Corporation approval is prohibited. © 2021 The Viking Group Inc.

8.4 Environmental Specification

Parameter	Units	Min	Max	Comment
ATEX/IECEx Operating Ambient Temperature	ºF/ºC	-76 / -60	+185 / +85	T5
ATEX/IECEx Operating Ambient Temperature	ºF/ºC	-76 / -60	+158 / +70	T6
US Operating Ambient Temperature	ºF/ºC	-58 / -50	+185 / +85	T5
US Operating Ambient Temperature	ºF/ºC	-58 / -50	+158 / +70	T6
Storage Ambient Temperature	ºF/ºC	-76 / -60	+185 / +85	
Relative Humidity	%RH	0	93	Non-condensing

8.5 Certification and Approvals

Parameter	Authority/ Standard	Approval	Certificate*
Hazardous Area Certification	ATEX	Ex II 2 G Ex db II C T5/T6 Gb IP67	FM21ATEX0029X
Hazardous Area Certification	NEC 505	Class1 Zone 1 A Ex db IIC T5/T6	PR460215
Hazardous Area Certification	NEC 500	Class 1 Div 1, Groups B, C, D T5/T6	PR460215
Hazardous Area Certification	IECEx	Ex II 2 G Ex db II C T5/T6 Gb IP67	FME 21.0004X
American Fire Service Listing	FM	Class 3260, 3615, 3600	PR460215
European Fire Services Listing	FM	EN 54 Part 10 2002	2809-CPR-E0023
CE Marked (Emissions)	Element	EN61000-6-3:2007A1:2011	TRA-037863-35-00A
CE Marked (Immunity)	FM	EN50130-4 2011 A1:2014	9313-1
IEC 61508	exida	Certified SIL 2 Capable	VIK 2104078 C002

8.6 Operating Specification

Parameter	Units	Min	Max	Comment
Detector Range (depth of field)	ft / m	6.5 / 2.0	200 / 60	
Horizontal Field of View	Degrees	90	90	
Vertical Field of View	Degrees	90	90	
Detector Response Time	Seconds	4.0	30	
Power on reset delay	Seconds	5	5	

Parameter	Value
Detector sensitivity	Low, Standard (Factory default) and High.
Alarm Setting	Non-latching with automatic reset after 15 seconds (default) OR latched until the power is removed from detector.
Advanced Optical Verification	Yes – no mirror continuous automatic optical verification
Heated Optics	Yes – microprocessor controlled
LED Status	Tri-state LED – Green HEALTHY; Yellow FAULT; Red ALARM
Output Options	0(4)-20mA, HART® 7, Relay contacts - alarm and fault
Relay Rating	2 Relay Contacts – Alarm and Fault. DPDT, 2A @ 30Vdc
Communication/ Configuration	RS485 and HART® 7

This document is strictly private and confidential, reproduction without Viking Corporation approval is prohibited. © 2021 The Viking Group Inc.

8.7 VSF303 Detector Ordering Information

Viking Model	Viking Suffix	Part Number	Weight (lbs.)
VSF303 MSIR	-NPT-2	24364	5.5
VSF303 MSIR Short	-NPT-2-Short	29056	4
VSF303 MSIR	-M25-2	24365	5.5
VSF303 MSIR Short	-M25-2-Short	29057	4
VSF303 MSIR	-NPT-SST-2	24366	13.2
VSF303 MSIR Short	-NPT-SST-2-Short	29058	10
VSF303 MSIR	-M25-SST-2	24367	13.2
VSF303 MSIR Short	-M25-SST-2-Short	29059	10
VSF303 MSIR	-NPT-1	24598	5.5
VSF303 MSIR Short	-NPT-1-Short	29061	4
VSF303 MSIR	-NPT-SST-1	24595	13.2
VSF303 MSIR Short	-NPT-SST-1-Short	29060	10

Note – additional cable entry variants are available upon request.

8.8 Detector Accessories and Spares

Parameter	Part Number	Weight (lbs.)
VSF3008 ITEST	24376	5.5
Vertical to Horizontal Mounting Adapter	24377	2.2
Standard Bracket 316 Stainless Steel (Spare only)	24378	2.2
Marine Bracket 316 Stainless Steel (not fitted)	24379	4.4
Detector Sealing Kit - Metric	24380	0.1
Flame Simulator Charger (spare)	24382	0.4
Sunshield	24383	1.1
2" pole mount kit	24384	5.5
3" pole mount kit	24385	5.5
4" pole mount kit	24386	5.5
USB to RS485 Converter	24591	0.3
USB HART Modem	24592	0.3

This document is strictly private and confidential, reproduction without Viking Corporation approval is prohibited. © 2021 The Viking Group Inc.

9 Appendix A - Acronyms, Terms & Abbreviations

Term	Description
AC	Alternating Current
ATEX	Atmosphere Explosive
AWG	American Wire Gauge
BS	British Standard
CCTV	Closed Circuit Television
CE	European Conformity
CO2	Carbon Dioxide
CSA	Canadian Standards Associated
dB	Decibel
DC	Direct Current
EMC	Electromagnetic Compatibility
EN	European Norm
FM	Factory Mutual
FOV	Field of View
HFT	Hardware Fault Tolerance
I or A	Electrical Current or Ampere
JB	Junction Box
Km	Kilometer
kW	Kilo Watt
LED	Light Emitting Diode
mH	Milli Henry – Inductance
MOR	Meteorological Optical Range
NEC	National Electrical Codes
nF, pF	Nano Farad, Pico Farad – Capacitance
PC	Personal Computer (IBM PC Compatible)
R or Ω	Ohms (electrical resistance)
SFF	Safe Failure Fraction
SIL	Safety Integrity Level
V	Voltage
Vs	Versus
W	Watts (Wattage)

This document is strictly private and confidential, reproduction without Viking Corporation approval is prohibited. © 2021 The Viking Group Inc.

10 Appendix B - Field of View

Horizontal field of view to a 1 ft^2 (0.1 m^2) N-heptane pan fire with an alarm response at standard sensitivity.

100% = 100 ft (30 m).

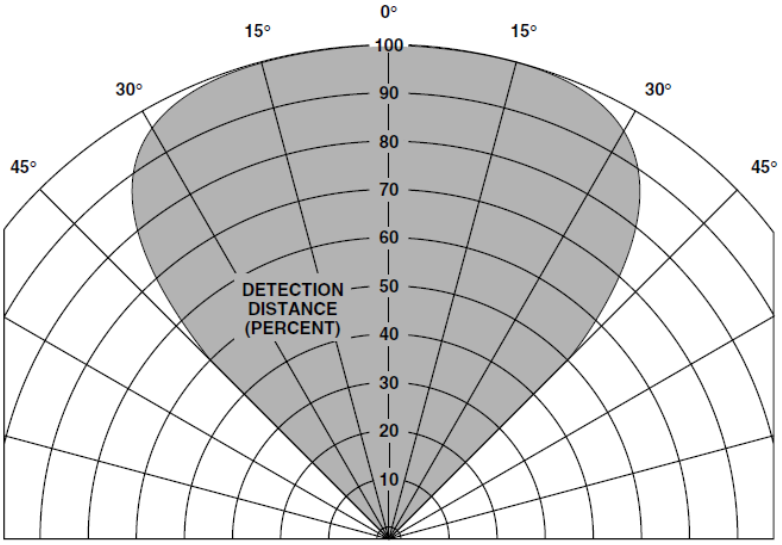

Vertical field of view to a 1 ft^2 (0.1 m^2) N-heptane pan fire with an alarm response at standard sensitivity.

100%= 100 ft (30 m).

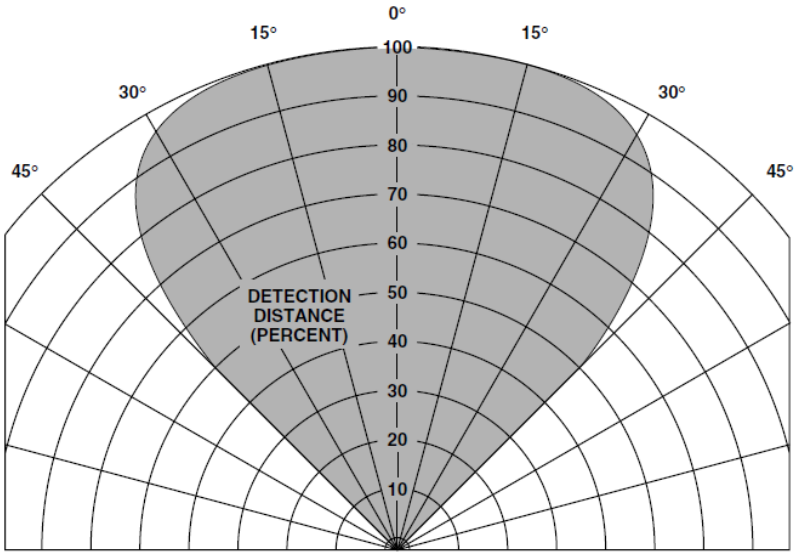

This document is strictly private and confidential, reproduction without Viking Corporation approval is prohibited. © 2021 The Viking Group Inc.

11 Appendix C - FM Approval Performance Report

Alarm response to various stimuli.

Stimuli	Low Alarm Distance	Standard Alarm Distance	High Alarm Distance
N-heptane 0.1m^2 pan fire	50 ft (15 m)	100 ft (30 m)	200 ft (60 m)
Ethanol 0.1m^2 pan fire	50 ft (15 m)	100 ft (30 m)	138 ft (42 m)
JP4 0.1m^2 pan fire	No test	100 ft (30 m)	200 ft (60 m)
Methane 0.6m plume fire	50 ft (15 m)	100 ft (30 m)	164 ft (50 m)
100W incandescent Lamp steady state	No Alarm 3 ft (0.9 m)	No Alarm 6 ft (1.8 m)	No Alarm 6 ft (1.8 m)
100W incandescent Lamp modulated	No Alarm 3 ft (0.9 m)	No Alarm 6 ft (1.8 m)	No Alarm 6 ft (1.8 m)
Two 40W Fluorescent lamps steady state	No Alarm 3 ft (0.9 m)	No Alarm 6 ft (1.8 m)	No Alarm 6 ft (1.8 m)
Two 40W Fluorescent lamps modulated	No Alarm 3 ft (0.9 m)	No Alarm 6 ft (1.8 m)	No Alarm 6 ft (1.8 m)
500W Quartz Halogen lamp steady state	No Alarm 3 ft (0.9 m)	No Alarm 6 ft (1.8 m)	No Alarm 6 ft (1.8 m)
500W Quartz Halogen lamp modulated	No Alarm 3 ft (0.9 m)	No Alarm 6 ft (1.8 m)	No Alarm 6 ft (1.8 m)
190 Amp Electric arc welding	No Alarm 20 ft (6.0 m)	No Alarm 26 ft (8.0 m)	No Alarm 33 ft (10 m)
3000W electric space heater steady state	No Alarm 6 ft (1.8 m)	No Alarm 6 ft (1.8 m)	No Alarm 6 ft (1.8 m)
3000W electric space heater modulated	No Alarm 6 ft (1.8 m)	No Alarm 6 ft (1.8 m)	No Alarm 6 ft (1.8 m)
1500W electric heater steady state	No Alarm 6 ft (1.8 m)	No Alarm 6 ft (1.8 m)	No Alarm 6 ft (1.8 m)
1500W electric heater modulated	No Alarm 6 ft (1.8 m)	No Alarm 6 ft (1.8 m)	No Alarm 6 ft (1.8 m)
Reflected Sunlight	No Alarm	No Alarm	No Alarm
Reflected modulated Sunlight	No Alarm	No Alarm	No Alarm

This document is strictly private and confidential, reproduction without Viking Corporation approval is prohibited. © 2021 The Viking Group Inc.

Low sensitivity response to N-heptane 1 ft² (0.1m²) pan fire in the presence of false alarm stimuli.

False Alarm Stimuli	Distance to False Alarm	Distance to Fire
100W incandescent Lamp steady state	3 ft (0.9 m)	50 ft (15 m) Alarm
100W incandescent Lamp modulated	3 ft (0.9 m)	50 ft (15 m) Alarm
Two 40W Fluorescent lamps steady state	3 ft (0.9 m)	50 ft (15 m) Alarm
Two 40W Fluorescent lamps modulated	3 ft (0.9 m)	50 ft (15 m) Alarm
500W Quartz Halogen lamp steady state	3 ft (0.9 m)	50 ft (15 m) Alarm
500W Quartz Halogen lamp modulated	3 ft (0.9 m)	50 ft (15 m) Alarm
190 Amp Electric arc wielding	20 ft (6.0 m)	50 ft (15 m) Alarm
3000W electric space heater steady state	6 ft (1.8 m)	50 ft (15 m) Alarm
3000W electric space heater modulated	6 ft (1.8 m)	50 ft (15 m) Alarm
1500W electric heater steady state	6 ft (1.8 m)	50 ft (15 m) Alarm
1500W electric heater modulated	6 ft (1.8 m)	50 ft (15 m) Alarm
Reflected Sunlight	N/A	50 ft (15 m) Alarm
Reflected modulated Sunlight	N/A	50 ft (15 m) Alarm

Standard sensitivity response to N-heptane 1 ft² (0.1m²) pan fire in the presence of false alarm stimuli.

False Alarm Stimuli	Distance to False Alarm	Distance to Fire
100W incandescent Lamp steady state	6 ft (1.8 m)	100 ft (30 m) Alarm
100W incandescent Lamp modulated	6 ft (1.8 m)	100 ft (30 m) Alarm
Two 40W Fluorescent lamps steady state	6 ft (1.8 m)	100 ft (30 m) Alarm
Two 40W Fluorescent lamps modulated	6 ft (1.8 m)	100 ft (30 m) Alarm
500W Quartz Halogen lamp steady state	6 ft (1.8 m)	100 ft (30 m) Alarm
500W Quartz Halogen lamp modulated	6 ft (1.8 m)	100 ft (30 m) Alarm
190 Amp Electric arc welding	26 ft (8.0 m)	100 ft (30 m) Alarm
3000W electric space heater steady state	6 ft (1.8 m)	100 ft (30 m) Alarm
3000W electric space heater modulated	6 ft (1.8 m)	100 ft (30 m) Alarm
1500W electric heater steady state	6 ft (1.8 m)	100 ft (30 m) Alarm
1500W electric heater modulated	6 ft (1.8 m)	100 ft (30 m) Alarm
Reflected Sunlight	N/A	100 ft (30 m) Alarm
Reflected modulated Sunlight	N/A	100 ft (30 m) Alarm

This document is strictly private and confidential, reproduction without Viking Corporation approval is prohibited. © 2021 The Viking Group Inc.

High Sensitivity response to N-heptane 1 ft^2 (0.1m^2) pan fire in the presence of false alarm stimuli.

False Alarm Stimuli	Distance to False Alarm	Distance to Fire
100W incandescent Lamp steady state	6 ft (1.8 m)	200 ft (60 m) Alarm
100W incandescent Lamp modulated	6 ft (1.8 m)	200 ft (60 m) Alarm
Two 40W Fluorescent lamps steady state	6 ft (1.8 m)	200 ft (60 m) Alarm
Two 40W Fluorescent lamps modulated	6 ft (1.8 m)	200 ft (60 m) Alarm
500W Quartz Halogen lamp steady state	6 ft (1.8 m)	200 ft (60 m) Alarm
500W Quartz Halogen lamp modulated	6 ft (1.8 m)	200 ft (60 m) Alarm
190 Amp Electric arc welding	26 ft (8.0 m)	200 ft (60 m) Alarm
3000W electric space heater steady state	6 ft (1.8 m)	200 ft (60 m) Alarm
3000W electric space heater modulated	6 ft (1.8 m)	200 ft (60 m) Alarm
1500W electric heater steady state	6 ft (1.8 m)	200 ft (60 m) Alarm
1500W electric heater modulated	6 ft (1.8 m)	200 ft (60 m) Alarm
Reflected Sunlight	N/A	200 ft (60 m) Alarm
Reflected modulated Sunlight	N/A	200 ft (60 m) Alarm

This document is strictly private and confidential, reproduction without Viking Corporation approval is prohibited. © 2021 The Viking Group Inc.

12 Appendix D - IEC 61508 Functional Safety

IEC 61508: ed 2, 2010

The VSF303 is classified as a Type B Element according to IEC 61508, having a hardware fault tolerance of 0.

For detailed information on failure rate data and assumptions, proof test coverage and useful life, refer to the FMEDA report completed for this project: VIK 2104078 R002. Please contact techsvcs@vikingcorp.com for access to this document.

PFDavg, the probability of failure on demand must be calculated by end users for their own application. Also refer to FMEDA report for further details on how this is calculated.

This document is strictly private and confidential, reproduction without Viking Corporation approval is prohibited. © 2021 The Viking Group Inc.

Viking Corporation
5150 Beltway Dr. SE
Caledonia MI 49316

Form No. F_020521 Rev 2.2

Ref: 3303.001 Rev: 3.1 ECN:4652

This document is strictly private and confidential, reproduction without Viking Corporation approval is prohibited. © 2021 The Viking Group Inc.