STANDARD RESPONSE DRY PENDENT ELO SPRINKLERS

TECHNICAL DATA

The Viking Corporation, 210 N Industrial Park Drive, Hastings MI 49058
Telephone: 269-945-9501 Technical Services: 877-384-5464 Fax: 269-818-1680 Email: techsvcs@vikingcorp.com
Visit the Viking website for the latest edition of this technical data page www.vikinggroupinc.com

1. DESCRIPTION

Viking Standard Response Dry Pendent Extra-Large Orifice (ELO) Sprinklers are thermosensitive spray sprinklers suitable for use in areas subject to freezing. These dry pendent ELO sprinklers are FM Approved for storage and non-storage applications. In certain FM cold storage installations, the dry ELO sprinklers can provide a design advantage with lower overall water demands. In these applications, the dry ELO must be installed on a wet pipe system, per FM data sheet 8-9. In non-storage applications, when used in dry or preaction systems, the sprinklers are designed to prevent water or condensation from entering the drop nipple before the sprinkler operates. Viking Standard Response Dry Pendent ELO Sprinklers are available in various finishes and temperature ratings to meet design requirements.

The optional dry sprinkler boot assembly is intended to slow the exchange of air between the inside and outside of the freezer (or any dry sprinkler installation) to help prevent humidity and temperature differential in the area around the sprinkler. Condensation can lead to ice build-up, which could inhibit sprinkler operation or cause premature operation.

If using the insulating boot assemblies included with your sprinklers (optional for installation), follow the installation instructions in this technical data page. Insulating boot assemblies, if used, shall be installed on smooth, flat, and clean surfaces. There are specific installation situations, as with corrugated ceiling panels, where alternative penetration sealing methods may be utilized. For additional information contact Viking Technical Services.



Thread Size	K-Factor
1-1/4" NPT (32 mm BSPT)	11.2 (161.3 Metric)
SIN	**Style**
VK544	Plain Barrel
VK545	Adjustable Recessed
VK546	Adjustable Standard

2. LISTINGS AND APPROVALS

FM Approved: Classes 2013 and 2015

Refer to Approval Chart and Design Criteria for FM Approval requirements that must be followed.

3. TECHNICAL DATA

Specifications:

Minimum Operating Pressure: 7 psi (0.5 bar)*
Maximum Working Pressure: 175 psi (12 bar).
Factory tested hydrostatically to 500 psi (34.5 bar)
Thread size: 1-1/4” NPT or 32 mm BSPT
Nominal K-Factor: 11.2 U.S. (161.3 metric**) for all listed and approved lengths.
* FM Approval, and NFPA 13 installs require a minimum of 7 psi (0.5 bar).
**Metric K-factor measurement shown is when pressure is measured in bar. When pressure is measured in kPa, divide the metric K-factor shown by 10.0.

WARNING: Cancer and Reproductive Harm- www.P65Warnings.ca.gov

Material Standards:

Frame Casting: Brass UNS-C84400
Deflector: Brass
Fusible Link Assembly: Beryllium Nickel, coated with Polyurethane
Belleville Spring Sealing Assembly: Nickel Alloy, coated on both sides with PTFE tape
Compression Screw: Brass UNS-C36000
Seat assembly: Brass UNS-C36000
Support: Stainless steel wire UNS-S31603
Trigger: Stainless steel wire UNS-S31603
Orifice: Brass UNS-C36000
Tube: ERW Hydraulic Steel Tube
Barrel End and Threads: QM Brass
Support (Internal): QM Brass
Barrel: Steel Pipe UNS-G10260, Electrodeposited Epoxy Base finish
Sleeve (for Adjustable Standard style only): Brass UNS-C26000 or UNS-C26800

The Viking Corporation, 210 N Industrial Park Drive, Hastings MI 49058
Telephone: 269-945-9501 Technical Services: 877-384-5464 Fax: 269-818-1680 Email: techsvcs@vikingcorp.com
Visit the Viking website for the latest edition of this technical data page www.vikinggroupinc.com

Insulating boot assemblies: (NOTE: 2 seals included with each VK544 and 1 with each VK545 or VK546):
Seal:
ASTM D1056 2A0/1 4015-EL EPDM-Butyl-PE Foam Rubber OR
ASTM D1056 2A1 Neoprene/EPDM/SBR OR
ASTM D1056 2C1 Neoprene/EPDM
Over-seal ring and under-seal ing: Cold-rolled steel
Finish: White paint
#10 Screws: Stainless steel
Escutcheon Materials:
Adjustable standard dry escutcheons: brass UNS-C26000 or UNS-C26800
Recessed dry escutcheons: Cold-rolled steel UNS-G10080

Ordering Information: Refer to Table 1.

4. INSTALLATION

Refer to the applicable FM Loss Prevention data sheets.
Refer to appropriate NFPA Installation Standards.

5. OPERATION

During fire conditions, the heat-sensitive fusible element assembly disengages, releasing the internal parts to open the waterway. Water flowing through the sprinkler orifice strikes the sprinkler deflector, forming a uniform spray pattern to suppress the fire.

6. INSPECTIONS, TESTS AND MAINTENANCE

Refer to NFPA 25 for Inspection, Testing and Maintenance requirements.

7. AVAILABILITY

The Viking Standard Response Dry Pendent Sprinkler is available through a network of domestic and international distributors. See The Viking Corporation web site for the closest distributor or contact The Viking Corporation.

8. GUARANTEE

For details of warranty, refer to Viking's current list price schedule or contact Viking directly.

STANDARD RESPONSE DRY PENDENT ELO SPRINKLERS

TECHNICAL DATA

The Viking Corporation, 210 N Industrial Park Drive, Hastings MI 49058
Telephone: 269-945-9501 Technical Services: 877-384-5464 Fax: 269-818-1680 Email: techsvcs@vikingcorp.com
Visit the Viking website for the latest edition of this technical data page www.vikinggroupinc.com

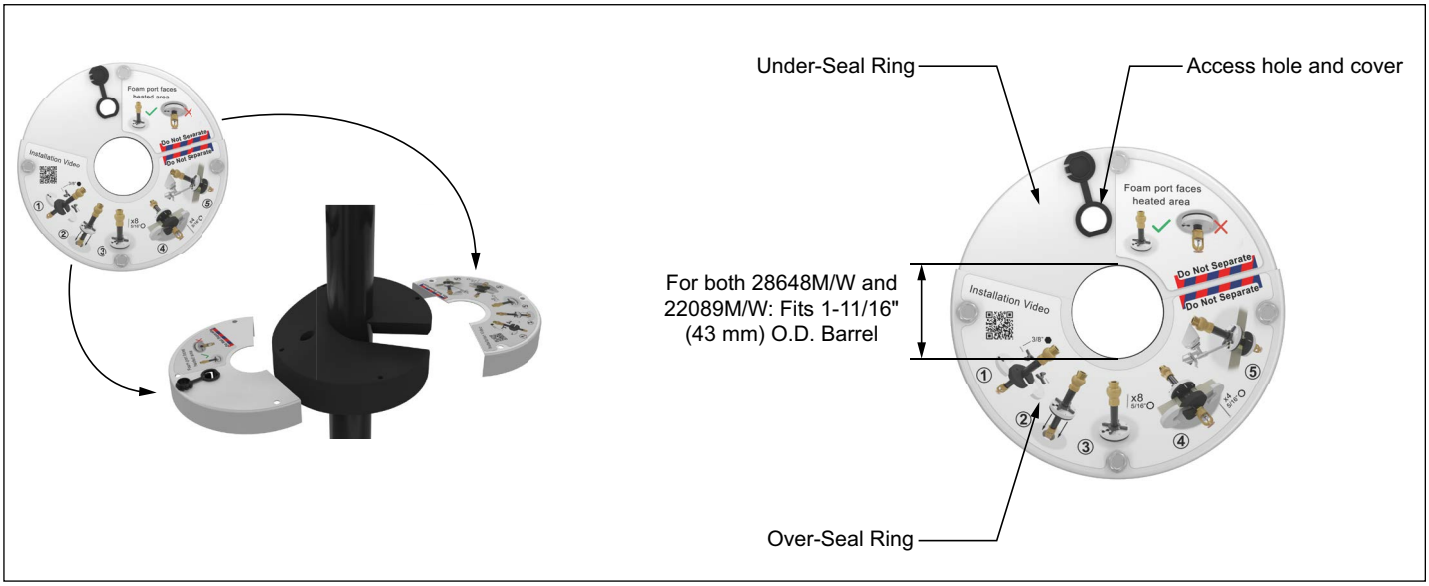

Figure 1: Replacement Boot 28648M/W Components and Dimensions

NOTICE Installation Instructions

Refer to document F_030107 for insulation boot installation instructions on a dry sprinkler.

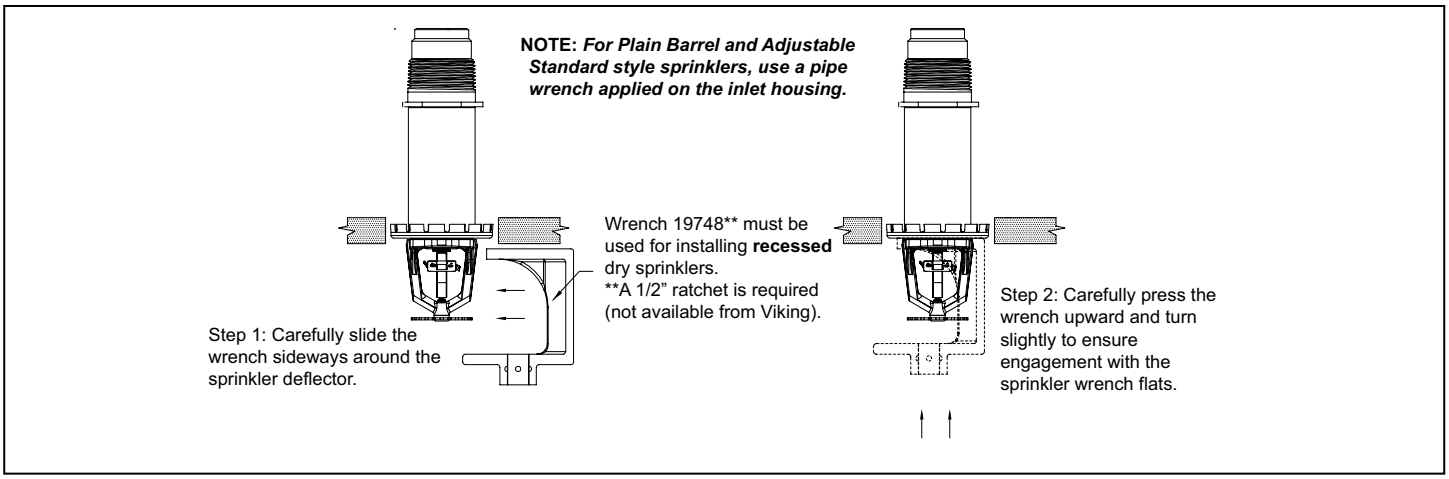

Figure 2: Installing the Sprinkler

TECHNICAL DATA

STANDARD RESPONSE DRY PENDENT ELO SPRINKLERS

The Viking Corporation, 210 N Industrial Park Drive, Hastings MI 49058
Telephone: 269-945-9501 Technical Services: 877-384-5464 Fax: 269-818-1680 Email: techsvcs@vikingcorp.com
Visit the Viking website for the latest edition of this technical data page www.vikinggroupinc.com

Ordering Instructions

1. Choose a sprinkler base part number with the required thread size.
2. Add the suffix for the desired finish.
3. Add the suffix for the desired temperature rating.
4. Select an available “A” length.

EXAMPLE: 19835FC12 = VK545 with chrome finish and 165°F (74°C) nominal temperature rating and an “A” dimension of 12 inches. This sprinkler is to be installed into an area with a maximum ambient temperature of 100 °F (38 °C).

Sprinkler Base Part Number

Sprinkler Model	Part Number	Thread Size	
		NPT (in)	BSPT (mm)
VK544	19830	1-1/4"	--
	19831	--	32 mm
VK545[1]	19835	1-1/4"	--
	19836	--	32 mm
	27298	1-1/4"	--
	27299	--	32 mm
VK546	19840	1-1/4"	--
	19841	--	32 mm

Footnote:
1. VK545’s part nos. 19835 and 19836 use slip-on escutcheons. VK545’s part nos. 27298 and 27299 use thread-on escutcheons.

Finishes

Description	Suffix[2]
Brass[3]	A
Chrome	F
White polyester	M-/W
ENT	JN

Footnotes:
2. Where a dash (-) is shown in the finish, insert the desired temperature rating.
3. Only available for the VK544.

Temperature Ratings

Temperature Rating[4]	Fusible Element Paint Color	Maximum Ambient Ceiling Temperature[5]	Suffix
165 °F (74 °C)	Black	100 °F (38 °C)	C
205 °F (96 °C)	White	150 °F (66 °C)	E
280 °F (138 °C)	Blue	225 °F (107 °C)	G

Footnotes:
4. The VK545 is not available in 280°F (138°C).
5. Based on NFPA 13. Other limits may apply depending on fire loading, sprinkler locating, sprinkler location, and other Authority Having Jurisdiction (AHJ) requirements. Refer to specific installation standards.

Available “A” Lengths in Inches (mm)

12 (305)
18 (457)
24 (610)
30 (762)
36 (914)
42 (1,067)
48 (1,219)

The “A” Dimension is the distance as measured from the face of the fitting in which the sprinkler will be installed to the face of the finished ceiling in the protected area. See Figures 2, 3, 4, and 5.

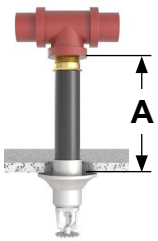

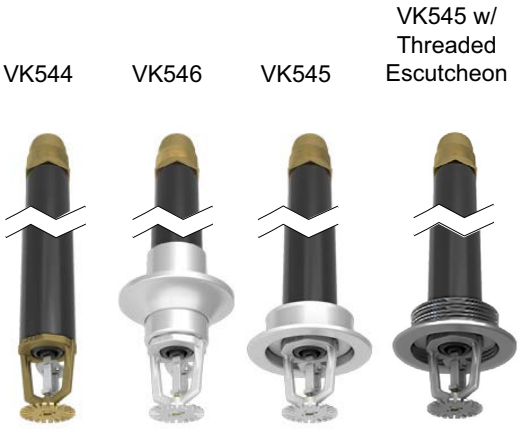

Accessories

Recessed Sprinkler Socket Wrench[6]: Part no. 19748W/B (requires a 1/2” ratchet that is not available at Viking)

Replacement Escutcheons:
Adjustable standard dry escutcheon: base part No. 19730.
Recessed dry escutcheon cups (for the VK545): base part nos. 22749 (E-1 slip-on) and 24991 (E-2 thread-on)

NOTE: When ordering sprinklers, 2 seals are included with each VK544 and 1 seal with each VK545 or VK546. Refer to Figure 8.
Replacement Insulating Seal (with access hole for additional insulation): Part no. 28648M/W (includes 1 seal assembly, installation label, and hardware)
Replacement Insulating Seal (without access hole): Part no. 22089M/W (includes 1 seal assembly and hardware)

Footnote:
6. Use a pipe wrench (applied on the inlet housing) for standard adjustable and plain barrel sprinklers.

VIKING®

TECHNICAL DATA

STANDARD RESPONSE DRY PENDENT ELO SPRINKLERS

The Viking Corporation, 210 N Industrial Park Drive, Hastings MI 49058
Telephone: 269-945-9501 Technical Services: 877-384-5464 Fax: 269-818-1680 Email: techsvcs@vikingcorp.com
Visit the Viking website for the latest edition of this technical data page www.vikinggroupinc.com

Approval Chart FM

Standard Response ELO Dry Pendent Sprinklers
Maximum 175 PSI (12 bar) WWP

Sprinkler Base Part No.[1]	SIN	Style	Thread Size		Nominal K-Factor[2]		Order Length Increment		FM Approvals[4] (Refer also to Design Criteria below.)
			NPT	BSPT	U.S.	Metric[3]	Inches	mm	
19830	VK544	Plain Barrel	1-1/4"	--	11.2	--	6"	--	A1, A4
19831			--	32 mm	--	161.3	--	153	A1, A4
19835	VK545[5]	Adjustable Recessed	1-1/4"	--	11.2	--	6"	--	B2, B4
19836			--	32 mm	--	161.3	--	153	B2, B4
27298			1-1/4"	--	11.2	--	6"	--	B2, B4
27299			--	32 mm	--	161.3	--	153	B2, B4
19840	VK546	Adjustable Standard	1-1/4"	--	11.2	--	6"	--	A3, A4
19841			--	32 mm		161.3	--	153	A3, A4

Approved Temperature Ratings

A - 165 °F (74 °C), 205 °F (96°C) and 280 °F (138 °C)
B - 165 °F (74 °C) and 205 °F (96°C)

Approved Finishes and "A" Dimensions

1 - Brass, chrome, and white polyester, with "A" dimensions 12" to 48" (305 to 1,22 m)
2 - Chrome and white polyester, with "A" dimensions 12" to 48" (305 to 1,22 m)
3 - Chrome, and white polyester with a chrome or white polyester sleeve and escutcheon with "A" dimensions 12" to 48" (305 to 1,22 m)
4 - ENT with "A" dimensions 12" to 48" (305 to 1,22 m)

Footnotes

1. Part number shown is the base part number. For complete part number, refer to current Viking price list schedule.
2. K-Factor applies for standard lengths ("A" Dimensions indicated above).
3. Metric K-factor measurement shown is when pressure is measured in Bar. When pressure is measured in kPa, divide the metric K-factor shown by 10.0.
4. This chart shows the FM Approvals available at the time of printing. Other approvals may be in process. Check with the manufacturer for any additional approvals.
5. VK545's part nos. 19835 and 19836 use slip-on escutcheons only. VK545's part nos. 27298 and 27299 use thread-on escutcheons only.

DESIGN CRITERIA - FM

(Also refer to Approval Chart above.)

FM Approval Requirements:

ELO Dry Pendent Sprinklers in the Approval Chart above are FM Approved as standard response, standard spray storage sprinklers as indicated in the FM Approval Guide. For specific application and installation requirements, reference the latest applicable FM Loss Prevention Data Sheets (including 2-0) and Technical Advisory Bulletins. FM Global Loss Prevention Data Sheets and Technical Advisory Bulletins contain guidelines relating to, but not limited to: minimum water supply requirements, hydraulic design, ceiling slope and obstructions, minimum and maximum allowable spacing, and deflector distance below the ceiling.

NOTE: The FM installation guidelines may differ from cULus and/or NFPA criteria.

IMPORTANT: Always refer to Bulletin Form No. F_091699 - Care and Handling of Sprinklers. Also refer to Bulletin Form F_080614 for general care, installation, and maintenance information. Viking sprinklers are to be installed in accordance with the latest edition of Viking technical data, the appropriate standards of NFPA, FM Global, LPCB, APSAD, VdS or other similar organizations, and also with the provisions of governmental codes, ordinances, and standards, whenever applicable.

The Viking Corporation, 210 N Industrial Park Drive, Hastings MI 49058
Telephone: 269-945-9501 Technical Services: 877-384-5464 Fax: 269-818-1680 Email: techsvcs@vikingcorp.com
Visit the Viking website for the latest edition of this technical data page www.vikinggroupinc.com

For “A” Dimension:

1. Determine the distance from the face of the tee to the finished ceiling.
2. Round to the nearest 6” (153 mm) increment between 12” and 48” (305 mm and 1,22 m).
3. Per “A” dimension, the deflector will be located approximately 4” (102 mm) below the ceiling.

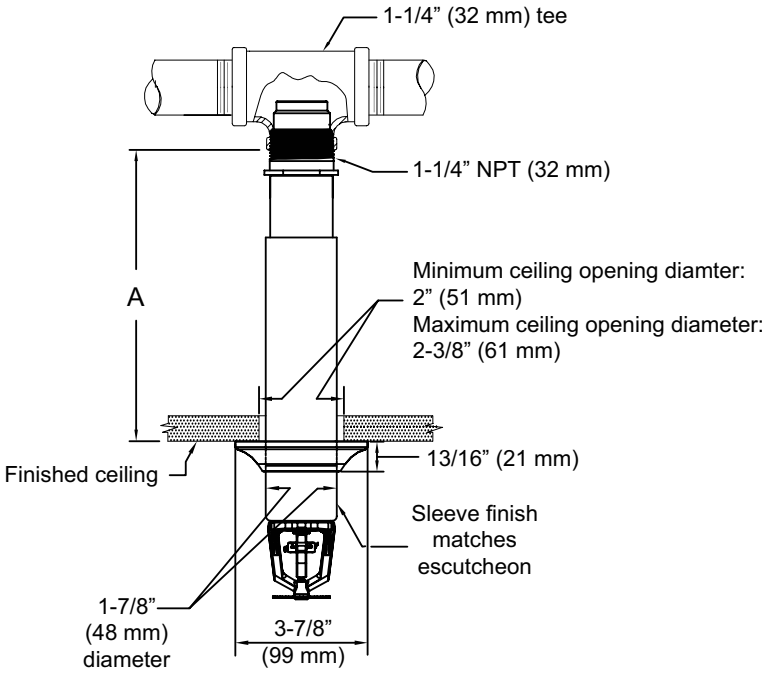

Deflector at minimum distance below ceiling.

NOTE: To locate the deflector at the minimum distance below the ceiling, with no upward adjustment available, order the dry pendent sprinkler as per the “A” dimension.

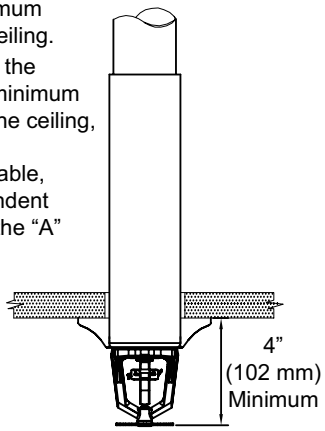

Deflector at maximum distance below ceiling.

NOTE: To locate the deflector at the maximum distance below the ceiling, with no downward adjustment available, order the dry pendent sprinkler 6” (153 mm) longer than the “A” dimension.

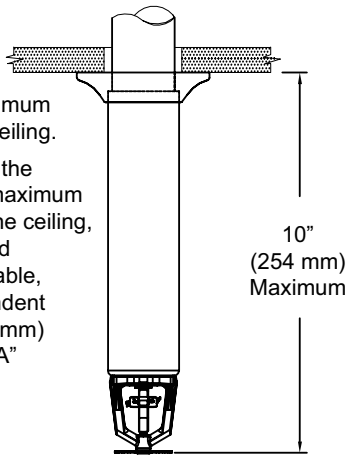

Figure 3: Adjustable Standard Dry Pendent Sprinkler

The Viking Corporation, 210 N Industrial Park Drive, Hastings MI 49058
Telephone: 269-945-9501 Technical Services: 877-384-5464 Fax: 269-818-1680 Email: techsvcs@vikingcorp.com
Visit the Viking website for the latest edition of this technical data page www.vikinggroupinc.com

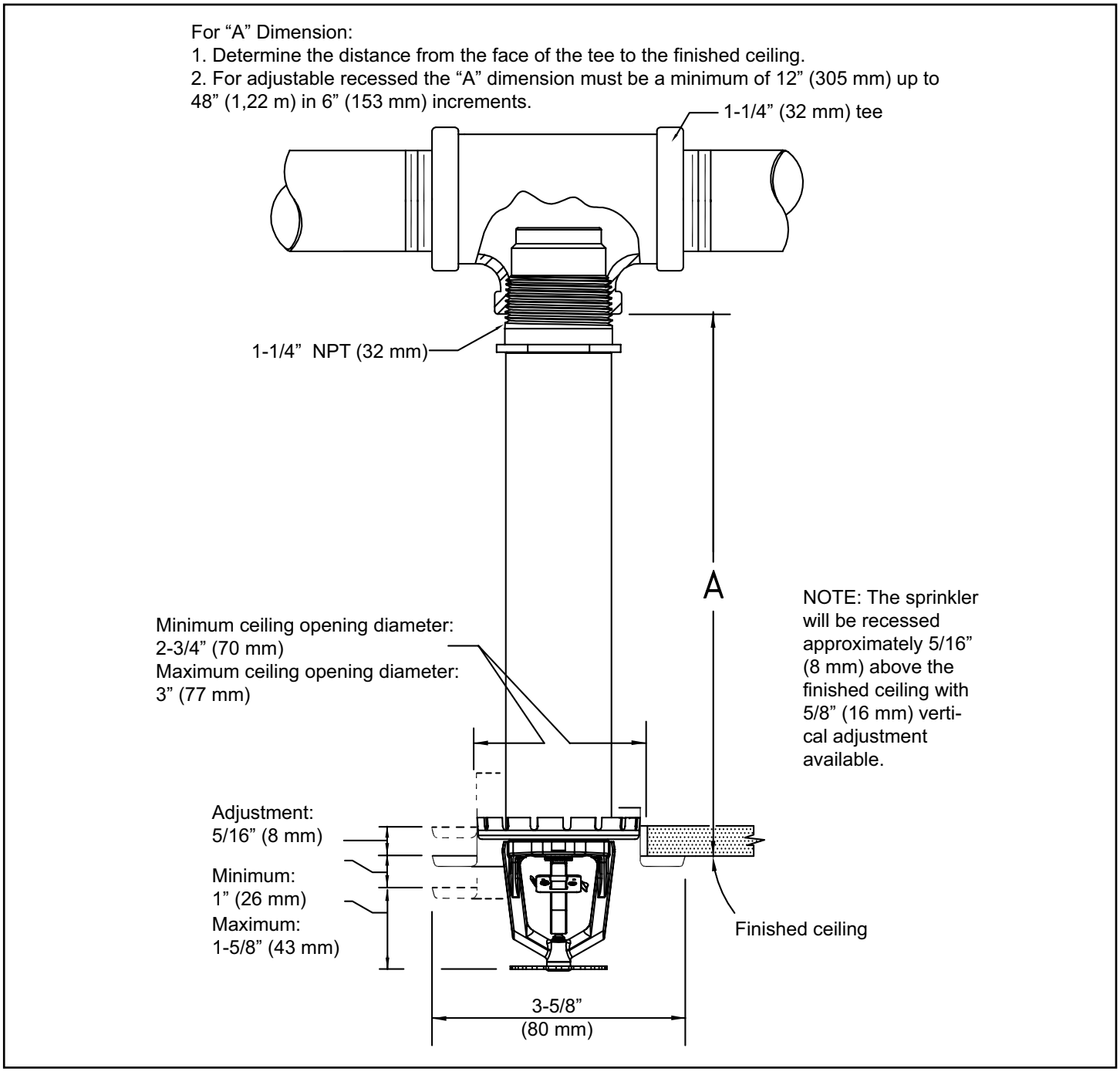

Figure 4: Adjustable Recessed Dry Pendent Sprinkler (Slip-On E-1 Escutcheon)

The Viking Corporation, 210 N Industrial Park Drive, Hastings MI 49058
Telephone: 269-945-9501 Technical Services: 877-384-5464 Fax: 269-818-1680 Email: techsvcs@vikingcorp.com
Visit the Viking website for the latest edition of this technical data page www.vikinggroupinc.com

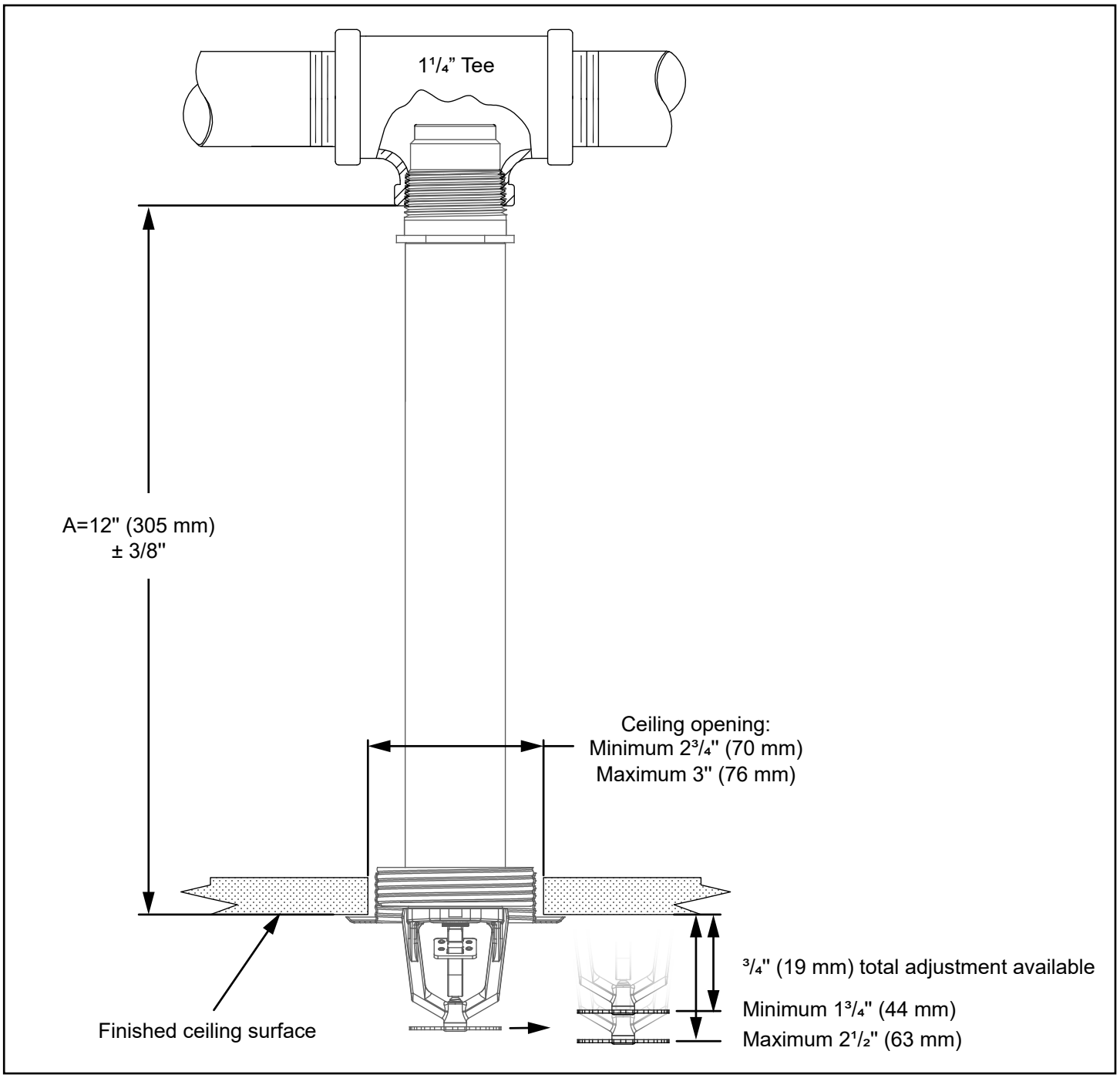

Figure 5: Adjustable Recessed Dry Pendent Sprinkler (Thread-On E-2 Escutcheon)

The Viking Corporation, 210 N Industrial Park Drive, Hastings MI 49058
Telephone: 269-945-9501 Technical Services: 877-384-5464 Fax: 269-818-1680 Email: techsvcs@vikingcorp.com
Visit the Viking website for the latest edition of this technical data page www.vikinggroupinc.com

For “A” Dimension:
1. Determine the distance from the face of the tee to the base of the sprinkler.
2. Round up to the next higher 6” (153 mm) increment between 12” and 48” (305 mm and 1,22 m)

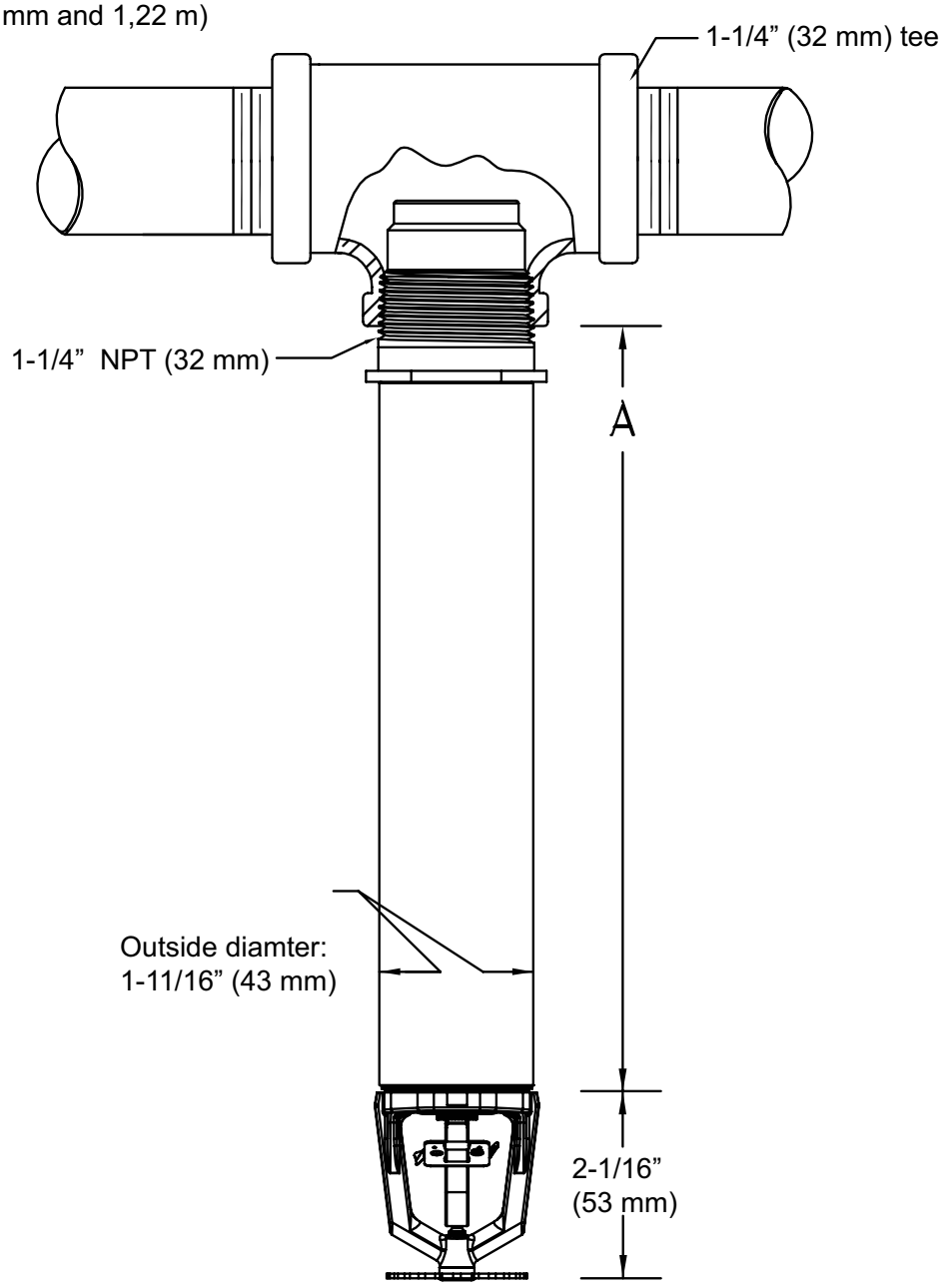

Figure 6: Plain Barrel Dry Pendent Sprinkler

VIKING®

TECHNICAL DATA

STANDARD RESPONSE DRY PENDENT ELO SPRINKLERS

The Viking Corporation, 210 N Industrial Park Drive, Hastings MI 49058
Telephone: 269-945-9501 Technical Services: 877-384-5464 Fax: 269-818-1680 Email: techsvcs@vikingcorp.com
Visit the Viking website for the latest edition of this technical data page www.vikinggroupinc.com

Ambient Temperature of Protected Area* at the Discharge End of the Sprinkler	Exposed Barrel Ambient Temperature		
	40°F(4°C)	50°F(10°C)	60°F(16°C)
	Exposed Minimum Barrel Length** Face of Tee to Top of Ceiling In. (mm)		
40 °F(4 °C)	0	0	0
30 °F(-4 °C)	0	0	0
20 °F(-7 °C)	4 (102)	0	0
10 °F(-12 °C)	8 (203)	1 (26)	0
0 °F(-18 °C)	12 (305)	3 (76)	0
-10 °F(-23 °C)	14 (356)	4 (102)	1 (26)
-20 °F(-29 °C)	14 (356)	6 (152)	3 (76)
-30 °F(-34 °C)	16 (406)	8 (203)	4 (102)
-40 °F(-40 °C)	18 (457)	8 (203)	4 (102)
-50 °F(-46 °C)	20 (508)	10 (254)	6 (152)
-60 °F(-51 °C)	20 (508)	10 (254)	6 (152)

Install 1-1/4" NPT (32 mm BSP) threaded end of dry pendent sprinkler into the 1-1/4" NPT (32 mm BSP) outlet of a malleable iron tee fitting per ANSI B 16.3 (Class 150) or cast iron threaded tee fitting per ANSI 16.4 (Class 125)

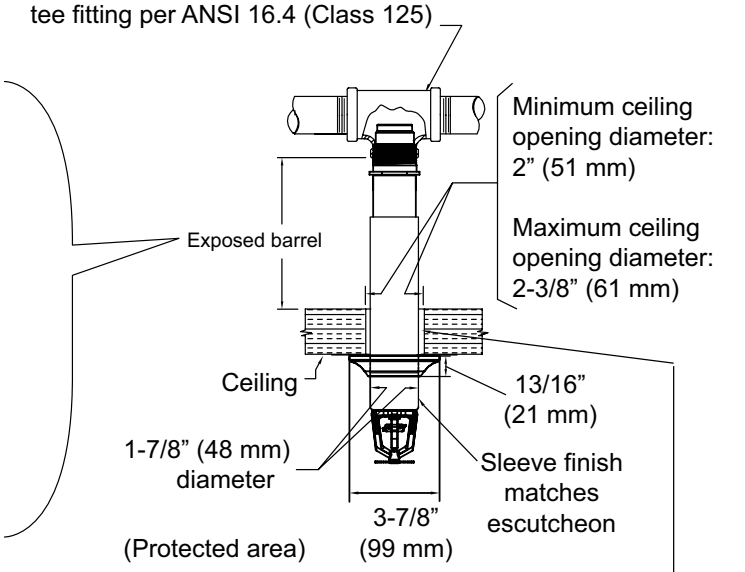

Seal the clearance space around the sprinkler to avoid leakage of air into the protected area and consequent formation of condensate around the frame, which could inhibit operation or cause premature operation. Refer to Figure 6 below.

If humidity and temperature differential causes condensation on the exposed dry sprinkler, consider wrapping the exposed barrel with insulation, foam insulating tape, or equivalent.

Deflector at minimum distance below ceiling.

NOTE: *To locate the deflector at the minimum distance below the ceiling, with no upward adjustment available, order the dry pendent as per the "A" dimension.*

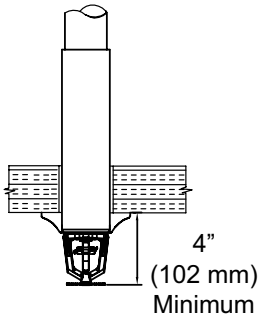

NOTE: *To locate the deflector at the maximum distance below the ceiling, with no downward adjustment available, order the dry pendent sprinkler 6" (153 mm) longer than the "A" dimension.*

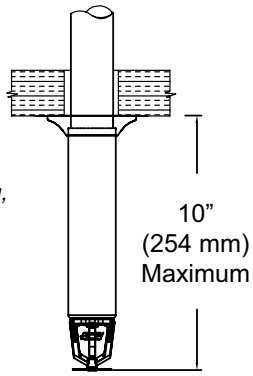

Deflector at maximum distance below ceiling.

*The protected area refers to the area below the ceiling. The ambient temperature is the temperature at the discharge end of the sprinkler. For protected area temperatures that occur between the values listed, use the next cooler temperature.
**The minimum required barrel length is not the same as the "A" dimension. Refer to Figures 2 - 4 for the "A" dimension.
NOTE: Exposed minimum barrel lengths are inclusive up to 30 mph wind velocities.

Figure 7: Dry Pendent Sprinkler Required Minimum Barrel Length Based on Ambient Temperature in the Protected Area (Adjustable Standard Dry Pendent Sprinkler is shown)

The Viking Corporation, 210 N Industrial Park Drive, Hastings MI 49058
Telephone: 269-945-9501 Technical Services: 877-384-5464 Fax: 269-818-1680 Email: techsvcs@vikingcorp.com
Visit the Viking website for the latest edition of this technical data page www.vikinggroupinc.com

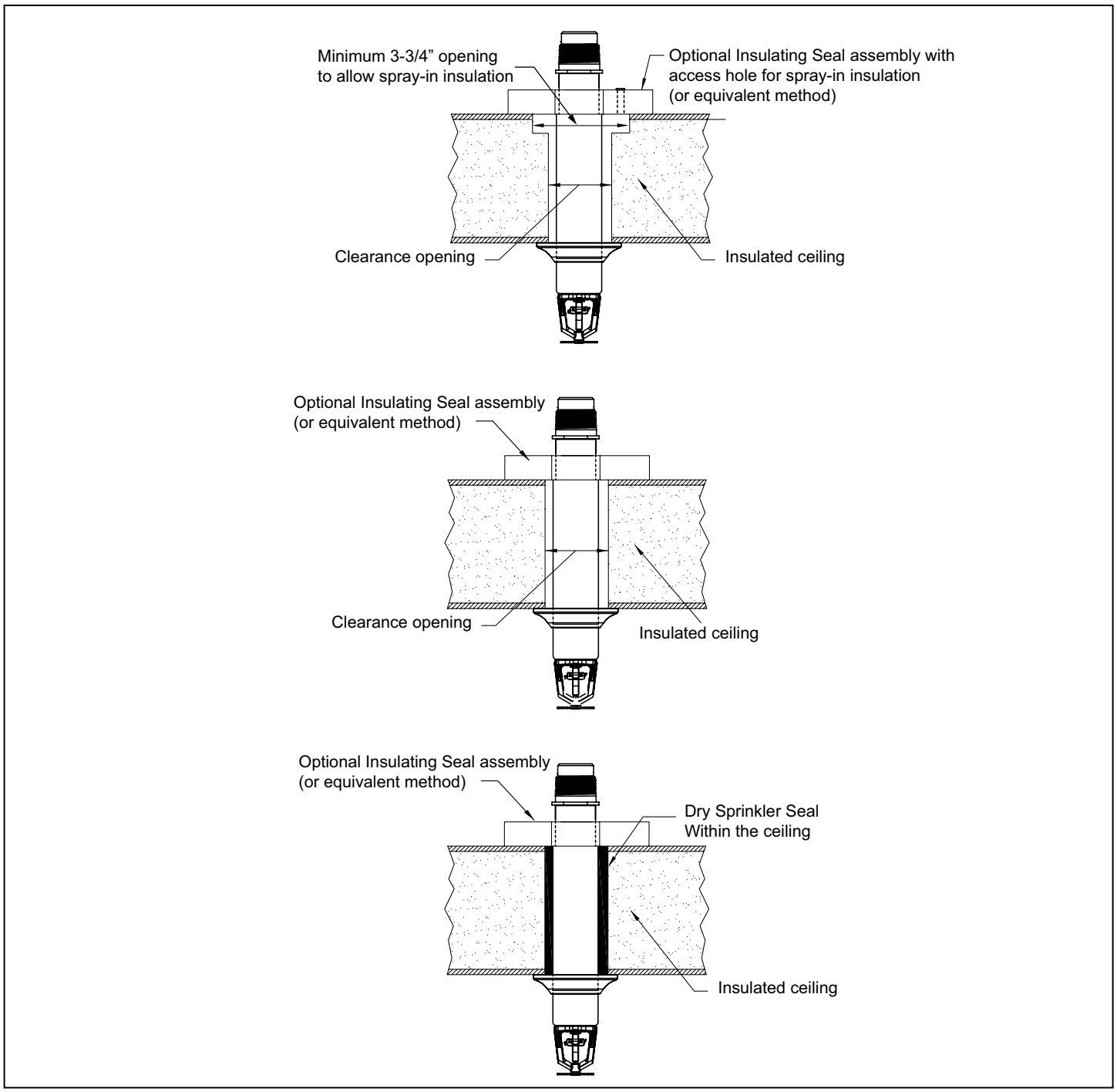

Figure 8: Dry Sprinkler Seal (Adjustable Standard Dry Pendent Sprinkler is Shown)

VIKING

BULLETIN

CARE AND HANDLING OF SPRINKLERS

The Viking Corporation, 210 N Industrial Park Drive, Hastings MI 49058
Telephone: 269-945-9501 Technical Services: 877-384-5464 Fax: 269-818-1680 Email: techsvcs@vikingcorp.com

SPRINKLERS ARE FRAGILE - HANDLE WITH CARE!

General Handling and Storage:

- Store sprinklers in a cool, dry place.
- Protect sprinklers during storage, transport, handling, and after installation.
- Use the original shipping containers. DO NOT place sprinklers loose in boxes, bins, or buckets.
- Keep sprinklers separated at all times. DO NOT allow metal parts to contact sprinkler operating elements.

For Pre-Assembled Drops:

- Protect sprinklers during handling and after installation.
- For recessed assemblies, use the protective sprinkler cap (Viking Part Number 10364).

Sprinklers with Protective Shields or Caps:

- DO NOT remove shields or caps until after sprinkler installation and there no longer is potential for mechanical damage to the sprinkler operating elements.
- **Sprinkler shields or caps MUST be removed BEFORE placing the system in service!**
- Remove the sprinkler shield by carefully pulling it apart where it is snapped together.
- Remove the cap by turning it slightly and pulling it off the sprinkler.

Sprinkler Installation:

- DO NOT use the sprinkler deflector or operating element to start or thread the sprinkler into a fitting.
- **Use only the designated sprinkler head wrench!** Refer to the current sprinkler technical data page to determine the correct wrench for the model of sprinkler used.
- DO NOT install sprinklers onto piping at the floor level.
- Install sprinklers after the piping is in place to prevent mechanical damage.
- DO NOT allow impacts such as hammer blows directly to sprinklers or to fittings, pipe, or couplings in close proximity to sprinklers. Sprinklers can be damaged from direct or indirect impacts.
- DO NOT attempt to remove drywall, paint, etc., from sprinklers.
- **Take care not to over-tighten the sprinkler and/or damage its operating parts!**

  Maximum Torque:
  1/2" NPT: 14 ft-lbs. (19.0 N-m)
  3/4" NPT: 20 ft-lbs. (27.1 N-m)
  1" NPT: 30 ft-lbs. (40.7 N-m)



CORRECT
(Original container used)



INCORRECT
(Placed loose in box)

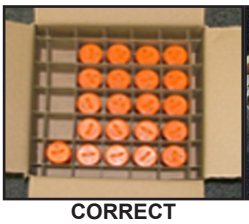

CORRECT
(Protected with caps)



INCORRECT
(Protective caps not used)

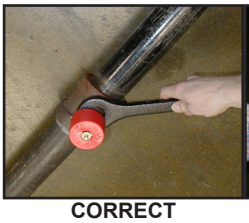

CORRECT
(Piping is in place at the ceiling)



INCORRECT
(Sprinkler at floor level)



CORRECT
(Special installation wrenches)



INCORRECT
(Designated wrench not used)

WARNING: Cancer and Reproductive Harm-
www.P65Warnings.ca.gov

⚠ WARNING

Any sprinkler with a loss of liquid from the glass bulb or damage to the fusible element should be destroyed. Never install sprinklers that have been dropped, damaged, or exposed to temperatures exceeding the maximum ambient temperature allowed. Sprinklers that have been painted in the field must be replaced per NFPA 13. Protect sprinklers from paint and paint overspray in accordance with the installation standards. Do not clean sprinklers with soap and water, ammonia, or any other cleaning fluid. Do not use adhesives or solvents on sprinklers or their operating elements.

Refer to the appropriate technical data page and NFPA standards for complete care, handling, installation, and maintenance instructions. For additional product and system information Viking data pages and installation instructions are available on the Viking Web site at www.vikinggroupinc.com.

VIKING | BULLETIN | CARE AND HANDLING OF SPRINKLERS

The Viking Corporation, 210 N Industrial Park Drive, Hastings MI 49058
Telephone: 269-945-9501 Technical Services: 877-384-5464 Fax: 269-818-1680 Email: techsvcs@vikingcorp.com

PROTECTIVE SPRINKLER SHIELDS AND CAPS

General Handling and Storage:

Many Viking sprinklers are available with a plastic protective cap or shield temporarily covering the operating elements. The snap-on shields and caps are factory installed and are intended to help protect the operating elements from mechanical damage during shipping, storage, and installation. NOTE: It is still necessary to follow the care and handling instructions on the appropriate sprinkler technical data sheets* when installing sprinklers with bulb shields or caps.

WHEN TO REMOVE THE SHIELDS AND CAPS:

NOTE: SHIELDS AND CAPS MUST BE REMOVED FROM SPRINKLERS BEFORE PLACING THE SYSTEM IN SERVICE!

Remove the shield or cap from the sprinkler only after checking all of the following:

- The sprinkler has been installed*.
- The wall or ceiling finish work is completed where the sprinkler is installed and there no longer is a potential for mechanical damage to the sprinkler operating elements.

SHIELDS AND CAPS MUST BE REMOVED FROM SPRINKLERS BEFORE PLACING THE SYSTEM IN SERVICE!

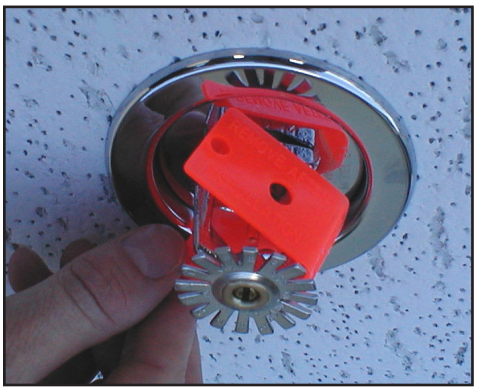

Figure 1: Sprinkler shield being removed from a pendent sprinkler.



Figure 2: Sprinkler cap being removed from a pendent sprinkler.

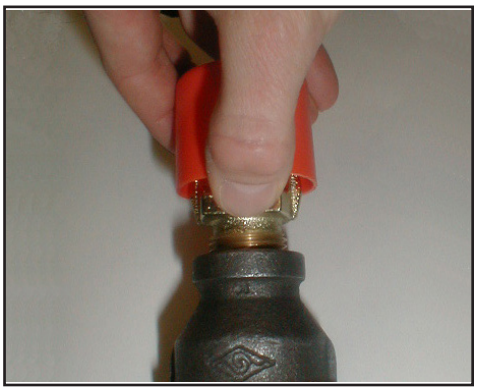

Figure 3: Sprinkler cap being removed from and upright sprinkler.

HOW TO REMOVE SHIELDS AND CAPS:

No tools are necessary to remove the shields or caps from sprinklers. DO NOT use any sharp objects to remove them! **Take care not to cause mechanical damage to sprinklers when removing the shields or caps.** When removing caps from fusible element sprinklers, use care to prevent dislodging ejector springs or damaging fusible elements. NOTE: Squeezing the sprinkler cap excessively could damage sprinkler fusible elements.

- To remove the shield, simply pull the ends of the shield apart where it is snapped together. Refer to Figure 1.
- To remove the cap, turn it slightly and pull it off the sprinkler. Refer to Figures 2 and 3.

NOTICE Refer to the current sprinkler technical data page to determine the correct sprinkler wrench for the model of sprinkler used.

⚠WARNING Never install sprinklers that have been dropped, damaged, or exposed to temperatures in excess of the maximum ambient temperature allowed.

*** Refer to the appropriate current technical data pages for complete care, handling, and installation instructions. Data pages are included with each shipment from Viking or Viking distributors. They can also be found on the Web site at www.vikinggroupinc.com.**

BULLETIN

CARE AND HANDLING OF SPRINKLERS

The Viking Corporation, 210 N Industrial Park Drive, Hastings MI 49058
Telephone: 269-945-9501 Technical Services: 877-384-5464 Fax: 269-818-1680 Email: techsvcs@vikingcorp.com

CAUTION CONCEALED COVER ASSEMBLIES ARE FRAGILE!
TO ASSURE SATISFACTORY PERFORMANCE OF THE PRODUCT, HANDLE WITH CARE.

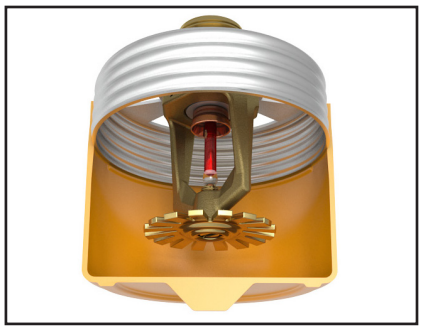

Concealed Sprinkler and Adapter Assembly with Protective Cap

Concealed Sprinkler and Adapter Assembly (Protective Cap Removed)



Cover Plate Assembly (Pendent Cover 12381 shown)



GENERAL HANDLING AND STORAGE INSTRUCTIONS:

- Do not store in temperatures exceeding 100 °F (38 °C). Avoid direct sunlight and confined areas subject to heat.
- Protect sprinklers and cover assemblies during storage, transport, handling, and after installation.
  -- Use original shipping containers.
  -- Do not place sprinklers or cover assemblies loose in boxes, bins, or buckets.
- Keep the sprinkler bodies covered with the protective sprinkler cap any time the sprinklers are shipped or handled, during testing of the system, and while ceiling finish work is being completed.
- Use only the designated Viking recessed sprinkler wrench (refer to the appropriate sprinkler data page) to install these sprinklers. **NOTE:** The protective cap is temporarily removed during installation and then placed back on the sprinkler for protection until finish work is completed.
- Do not over-tighten the sprinklers into fittings during installation.
- Do not use the sprinkler deflector to start or thread the sprinklers into fittings during installation.
- Do not attempt to remove drywall, paint, etc., from the sprinklers.
- Remove the plastic protective cap from the sprinkler before attaching the cover plate assembly. **PROTECTIVE CAPS MUST BE REMOVED FROM SPRINKLERS BEFORE PLACING THE SYSTEM IN SERVICE!**

Refer to the appropriate current technical data pages for complete care, handling, and installation instructions. Data pages are included with each shipment from Viking or Viking distributors. They can also be found on the Web site at www.vikinggroupinc.com.

VIKING

BULLETIN

CARE AND HANDLING OF SPRINKLERS

The Viking Corporation, 210 N Industrial Park Drive, Hastings MI 49058
Telephone: 269-945-9501 Technical Services: 877-384-5464 Fax: 269-818-1680 Email: techsvcs@vikingcorp.com

USE THE FOLLOWING PRECAUTIONS WHEN HANDLING WAX-COATED SPRINKLERS

Many of Viking's sprinklers are available with factory-applied wax coating for corrosion resistance. These sprinklers MUST receive appropriate care and handling to avoid damaging the wax coating and to assure satisfactory performance of the product.

General Handling and Storage of Wax-Coated Sprinklers:

- Store the sprinklers in a cool, dry place (in temperatures below the maximum ambient temperature allowed for the sprinkler temperature rating. Refer to Table 1 below.)
- Store containers of wax-coated sprinklers separate from other sprinklers.
- Protect the sprinklers during storage, transport, handling, and after installation.
- Use original shipping containers.
- Do not place sprinklers in loose boxes, bins, or buckets.

Installation of Wax-Coated Sprinklers:

Use only the special sprinkler head wrench designed for installing wax-coated Viking sprinklers (any other wrench may damage the unit).

- Take care not to crack the wax coating on the units.
- For touching up the wax coating after installation, wax is available from Viking in bar form. Refer to Table 1 below. The coating MUST be repaired after sprinkler installation to protect the corrosion-resistant properties of the sprinkler.
- Use care when locating sprinklers near fixtures that can generate heat. Do not install sprinklers where they would be exposed to temperatures exceeding the maximum recommended ambient temperature for the temperature rating used.
- Inspect the coated sprinklers frequently soon after installation to verify the integrity of the corrosion resistant coating. Thereafter, inspect representative samples of the coated sprinklers in accordance with NFPA 25. Close up visual inspections are necessary to determine whether the sprinklers are being affected by corrosive conditions.

TABLE 1

Sprinkler Temperature Rating (Fusing Point)	Wax Part Number	Wax Melting Point	Maximum Ambient Ceiling Temperature[1]	Wax Color
155 °F (68 °C) / 165 °F (74 °C)	02568A	148 °F (64 °C)	100 °F (38 °C)	Light Brown
175 °F (79 °C)	04146A	161 °F (71 °C)	150 °F (65 °C)	Brown
200 °F (93 °C)	04146A	161 °F (71 °C)	150 °F (65 °C)	Brown
220 °F (104 °C)	02569A	170 °F (76 °C)	150 °F (65 °C)	Dark Brown
286 °F (141 °C)	02569A	170 °F (76 °C)	150 °F (65 °C)	Dark Brown

[1] Based on NFPA-13. Other limits may apply, depending on fire loading, sprinkler location, and other requirements of the Authority Having Jurisdiction. Refer to specific installation standards.

⚠WARNING Never install sprinklers that have been dropped, damaged, or exposed to temperatures in excess of the maximum ambient temperature allowed.

Refer to the appropriate current technical data pages for complete care, handling, and installation instructions. Data pages are included with each shipment from Viking or Viking distributors. They can also be found on the Web site at www.vikinggroupinc.com.

TECHNICAL DATA — SPRINKLER OVERVIEW

The Viking Corporation, 210 N Industrial Park Drive, Hastings MI 49058
Telephone: 269-945-9501 Technical Services: 877-384-5464 Fax: 269-818-1680 Email: techsvcs@vikingcorp.com

1. DESCRIPTION

Viking fire sprinklers consist of a threaded frame with a specific waterway or orifice size and a deflector for distributing water in a specified pattern. A closed or sealed sprinkler refers to a complete assembly, including the thermosensitive operating element. An open sprinkler does not use an operating element and is open at all times. The distribution of water is intended to extinguish a fire or to control its spread.

Viking sprinklers are available in several models and styles. Refer to specific sprinkler technical data pages for available styles, finishes, temperature ratings, thread sizes, and nominal K-Factors for the particular model selected.

2. LISTINGS AND APPROVALS

Refer to the Approval Charts on the appropriate sprinkler technical data page(s) and/or approval agency listings.

WARNING: Cancer and Reproductive Harm- www.P65Warnings.ca.gov

3. TECHNICAL DATA

Pressure Ratings:

Maximum allowable water working pressure is 175 psig (12 Bar) unless rated and specified for high water working pressure [250 psig (17.2 bar)].

Sprinkler Identification:

Viking sprinklers are identified and marked with the word “Viking”, the sprinkler identification number (SIN) consisting of “VK” plus a three digit number*, the model letter, and the year of manufacture.

Available Finishes:

Viking sprinklers are available in several decorative finishes. Some models are available with corrosion-resistant coatings or are fabricated from non-corrosive material. Refer to the sprinkler technical data page for additional information.

Available Temperature Ratings:

Viking sprinklers are available in several temperature ratings that relate to a specific temperature classification. Applicable installation rules mandate the use and limitations of each temperature classification. In selecting the appropriate temperature classification, the maximum expected ceiling temperature must be known. When there is doubt as to the maximum temperature at the sprinkler location, a maximum-reading thermometer should be used to determine the temperature under conditions that would show the highest readings to be expected. In addition, recognized installation rules may require a higher temperature classification, depending upon sprinkler location, occupancy classification, commodity classification, storage height, and other hazards. In all cases, the maximum expected ceiling temperature dictates the lowest allowable temperature classification. Sprinklers located immediately adjacent to a heat source may require a higher temperature rating.

K-Factors:

Viking sprinklers are available in several orifice sizes with related K-Factors. The orifice is a tapered waterway and, therefore, the K-Factor given is nominal. Nominal U.S. K-Factors are provided in accordance with the 1999 edition of NFPA 13, Section 3-2.3. Refer to the specific data page for appropriate K-Factor information.

Available Styles:

Viking sprinklers are available for installation in several positions as indicated by a stamping on the deflector. The deflector style dictates the appropriate installation position of the sprinkler; it breaks the solid stream of water issuing from the sprinkler orifice to form a specific spray pattern. The following list indicates the various styles and identification of Viking sprinklers.

UPRIGHT SPRINKLER: A sprinkler intended to be installed with the deflector above the frame so water flows upward through the orifice, striking the deflector and forming an umbrella-shaped spray pattern downward. Marked “SSU” (Standard Sprinkler Upright) or “UPRIGHT” on the deflector.

PENDENT SPRINKLER: A sprinkler intended to be oriented with the deflector below the frame so water flows downward through the orifice, striking the deflector and forming an umbrella-shaped spray pattern downward. Marked “SSP” (Standard Sprinkler Pendent) or “PENDENT” on the deflector.

Viking Technical Data may be found on The Viking Corporation’s Web site at http://www.vikinggroupinc.com. The Web site may include a more recent edition of this Technical Data Page.

CONVENTIONAL SPRINKLER: An “old style” sprinkler intended to be installed with the deflector in either the upright or pendent position. The deflector provides a spherical type pattern with 40 to 60 percent of the water initially directed downward and a proportion directed upward. Must be installed in accordance with installation rules for conventional or old style sprinklers. DO NOT USE AS A REPLACEMENT FOR STANDARD SPRAY SPRINKLERS. Marked “C U/P” (Conventional Upright/Pendent) on the deflector.

The Viking Corporation, 210 N Industrial Park Drive, Hastings MI 49058
Telephone: 269-945-9501 Technical Services: 877-384-5464 Fax: 269-818-1680 Email: techsvcs@vikingcorp.com

VERTICAL SIDEWALL (VSW) SPRINKLER: A sprinkler intended for installation near the wall and ceiling. The deflector provides a water spray pattern outward in a quarter-spherical pattern and can be installed in the upright or pendent position with the flow arrow in the direction of discharge. Marked “SIDEWALL” on the deflector with an arrow and the word “FLOW”. (Note: Some vertical sidewall sprinklers can only be installed in the upright or pendent position—in this case, the sprinkler will also be marked “UPRIGHT” or “PENDENT”.)

HORIZONTAL SIDEWALL (HSW) SPRINKLER: A sprinkler intended for installation near the wall and ceiling. The special deflector provides a water spray pattern outward in a quarter-spherical pattern. Most of the water is directed away from the nearby wall with a small portion directed at the wall behind the sprinkler. The top of the deflector is oriented parallel with the ceiling or roof. The flow arrows point in the direction of discharge. Marked “SIDEWALL” and “TOP” with an arrow and the word “FLOW”.

EXTENDED COVERAGE (EC) SPRINKLER: A spray sprinkler designed to discharge water over an area having the maximum dimensions indicated in the individual listings. Maximum area of coverage, minimum flow rate, orifice size, and nominal K-Factor are specified in the individual listings. EC sprinklers are intended for Light-Hazard occupancies with smooth, flat, horizontal ceilings unless otherwise specified. In addition to the above markings, the sprinkler is marked “EC”.

QUICK RESPONSE (QR) SPRINKLER: A spray sprinkler with a fast- actuating operating element. The use of quick response sprinklers may be limited due to occupancy and hazard. Refer to the Authority Having Jurisdiction (AHJ) prior to installing.

QUICK RESPONSE EXTENDED COVERAGE (QREC) SPRINKLER: A spray sprinkler designed to discharge water over an area having the maximum dimensions indicated in the individual listing. This is a sprinkler with an operating element that meets the criteria for quick response. QREC sprinklers are only intended for Light Hazard occupancies. The sprinkler is marked “QREC”.

FLUSH SPRINKLER: A decorative spray sprinkler intended for installation with a concealed piping system. The unit is mounted flush with the ceiling or wall, with the fusible link exposed. Upon actuation, the deflector extends beyond the ceiling or wall to distribute water discharge. The sprinkler is marked “SSP”, “PEND”, or “SIDEWALL” and “TOP”.

CONCEALED SPRINKLER: A decorative spray sprinkler intended for installation with a concealed piping system. The sprinkler is hidden from view by a cover plate installed flush with the ceiling or wall. During fire conditions, the cover plate detaches, and upon sprinkler actuation, the deflector extends beyond the ceiling or wall to distribute water discharge. The sprinkler is marked “SSP”, “PEND”, or “SIDEWALL” and “TOP”.

RECESSED SPRINKLER: A spray sprinkler assembly intended for installation with a concealed piping system. The assembly consists of a sprinkler installed in a decorative adjustable recessed escutcheon that minimizes the protrusion of the sprinkler beyond the ceiling or wall without adversely affecting the sprinkler distribution or sensitivity. Refer to the appropriate technical data page for allowable sprinkler models, temperature ratings, and occupancy classifications. DO NOT RECESS ANY SPRINKLER NOT LISTED FOR USE WITH THE ESCUTCHEON.

CORROSION-RESISTANT SPRINKLER: A special service sprinkler with non-corrosive protective coatings, or that is fabricated from non-corrosive material, for use in atmospheres that would normally corrode sprinklers.

DRY SPRINKLER: A special-service sprinkler intended for installation on dry pipe systems or wet pipe systems where the sprinkler is subject to freezing temperatures. The unit consists of a sprinkler permanently secured to an extension nipple with a sealed inlet end to prevent water from entering the nipple until the sprinkler operates. The unit MUST be installed in a tee fitting. Dry upright sprinklers are marked with the “B” dimension [distance from the face of the fitting (tee) to the top of the deflector]. Dry pendent and sidewall sprinklers are marked with the “A” dimension [the distance from the face of fitting (tee) to the finished surface of the ceiling or wall].

LARGE DROP SPRINKLER: A type of special application sprinkler used to provide fire control of specific high-challenge fire hazards. Large drop sprinklers are designed to produce an umbrella-shaped spray pattern downward with a higher percentage of “large” water droplets than standard spray sprinklers. The sprinkler has an extra-large orifice with a nominal K-Factor of 11.2. Marked “HIGH CHALLENGE” and “UPRIGHT”.

EARLY SUPPRESSION FAST-RESPONSE (ESFR) SPRINKLER: A sprinkler intended to provide fire suppression of specific high-challenge fire hazards through the use of a fast response fusible link, 14.0, 16.8, or 25.2 nominal K-Factor, and special deflector. ESFR sprinklers are designed to produce high-momentum water droplets in a hemispherical pattern below the deflector. This permits penetration of the fire plume and direct wetting of the burning fuel surface while cooling the atmosphere early in the development of a high-challenge fire. Marked “ESFR” and “UPRIGHT” or “PEND”.

INTERMEDIATE LEVEL/RACK STORAGE SPRINKLER: A standard spray sprinkler assembly designed to protect its operating element from the spray of sprinklers installed at higher elevations. The assembly consists of a standard or large orifice upright or pendent sprinkler with an integral upright or pendent water shield and guard assembly. Use only those sprinklers that have been tested and listed for use with the assembly. Refer to the technical data page for allowable sprinkler models.

RESIDENTIAL SPRINKLER: A sprinkler intended for use in the following occupancies: one- and two-family dwellings with the fire protection sprinkler system installed in accordance with NFPA 13D; residential occupancies up to four stories in height with the fire protection system installed in accordance with NFPA 13R; and where allowed by the Authority Having Jurisdiction in residential portions of any occupancy with the fire protection system installed in accordance with NFPA 13.

The Viking Corporation, 210 N Industrial Park Drive, Hastings MI 49058
Telephone: 269-945-9501 Technical Services: 877-384-5464 Fax: 269-818-1680 Email: techsvcs@vikingcorp.com

Residential sprinklers have a unique distribution pattern and utilize a “fast response” heat sensitive operating element. They enhance survivability in the room of fire origin and are designed to provide a life safety environment for a minimum of ten minutes. For this reason, residential sprinklers must not be used to replace standard sprinklers unless tested for and approved by the Authority Having Jurisdiction. In addition to standard markings, the unit is identified as “RESIDENTIAL SPRINKLER” or “RES”.

4. INSTALLATION

Refer to appropriate NFPA Installation Standards.

5. OPERATION

Refer to the appropriate sprinkler technical data page(s).

6. INSPECTIONS, TESTS AND MAINTENANCE

Refer to NFPA 25 for Inspection, Testing and Maintenance requirements.

7. AVAILABILITY

Viking sprinklers are available through a network of domestic and international distributors. See The Viking Corporation web site for the closest distributor or contact The Viking Corporation.

8. GUARANTEE

For details of warranty, refer to Viking’s current list price schedule or contact Viking directly.

IMPORTANT: Always refer to Bulletin Form No. F_091699 - Care and Handling of Sprinklers and the appropriate sprinkler general care, installation, and maintenance guide. Viking sprinklers are to be installed in accordance with the latest edition of Viking technical data, the appropriate standards of NFPA, FM Global, LPCB, APSAD, VdS or other similar organizations, and also with the provisions of governmental codes, ordinances, and standards, whenever applicable. The sprinkler technical data page may contain installation requirements specific for the sprinkler model selected. The use of certain types of sprinklers may be limited due to occupancy and hazard. Refer to the Authority Having Jurisdiction prior to installation.

TECHNICAL DATA

SPRINKLER GENERAL CARE, INSTALLATION, AND MAINTENANCE GUIDE

The Viking Corporation, 210 N Industrial Park Drive, Hastings MI 49058
Telephone: 269-945-9501 Technical Services: 877-384-5464 Fax: 269-818-1680 Email: techsvcs@vikingcorp.com
Visit the Viking website for the latest edition of this technical data page.

1. DESCRIPTION - STANDARD RESPONSE, QUICK RESPONSE, EXTENDED COVERAGE, AND DRY SPRINKLERS

Viking thermosensitive spray sprinklers consist of a small frame and either a glass bulb or a fusible operating element. Available styles include pendent, flush pendent, concealed pendent, upright, horizontal sidewall, vertical sidewall, or conventional, depending on the particular sprinkler model selected.

Viking sprinklers are available with various finishes, temperature ratings, responses, and K-Factors to meet design requirements†. Used in conjunction with one of the corrosion-resistant coatings (for frame style sprinklers), the units provide protection against many corrosive environments. In addition, the special Polyester or Teflon® coatings can be used in decorative applications where colors are desired.

† Refer to the sprinkler technical data page for available styles, finishes, temperature ratings, responses, and nominal K-Factors for specific sprinkler models.

2. LISTINGS AND APPROVALS

Refer to the Approval Charts on the appropriate sprinkler technical data page(s) and/or approval agency listings.

3. TECHNICAL DATA

Specifications:

Refer to the appropriate sprinkler technical data sheet.

Material Standards:

Refer to the appropriate sprinkler technical data sheet.

WARNING: Cancer and Reproductive Harm- www.P65Warnings.ca.gov

4. INSTALLATION

NOTE: Take care not to over-tighten the sprinkler and/or damage its operating parts!

Maximum Torque:

1/2" NPT: 14 ft-lbs. (19.0 N-m)

3/4" NPT: 20 ft-lbs. (27.1 N-m)

1" NPT: 30 ft-lbs. (40.7 N-m)

A. Care and Handling (also refer to Bulletin - Care and Handling of Sprinklers, Form No. F_091699.)

Sprinklers must be handled with care. They must be stored in a cool, dry place in their original shipping container. Never install sprinklers that have been dropped, damaged, or exposed to temperatures exceeding the maximum ambient temperature allowed (refer to the temperature chart on the sprinkler technical data page). Never install any glass-bulb sprinkler if the bulb is cracked or if there is a loss of liquid from the bulb. A small air bubble should be present in the glass bulb. Any sprinkler with a loss of liquid from the glass bulb or damage to the fusible element should be destroyed immediately. (Note: Installing glass bulb sprinklers in direct sunlight (ultraviolet light) may affect the color of the dye used to color code the bulb. This color change does not affect the integrity of the bulb.)

Sprinklers must be protected from mechanical damage during storage, transport, handling, and after installation. Sprinklers subject to mechanical damage must be protected with an approved sprinkler guard.

Use only sprinklers listed as corrosion resistant when subject to corrosive environments. When installing corrosion-resistant sprinklers, take care not to damage the corrosion-resistant coating. Use only the special wrench designed for installing coated or recessed Viking sprinklers (any other wrench may damage the unit).

Concealed sprinklers must be installed in neutral or negative pressure plenums only!

Use care when locating sprinklers near fixtures that can generate heat. Do not install sprinklers where they could be exposed to temperatures exceeding the maximum recommended ambient temperature for the temperature rating used.

Wet pipe systems must be provided with adequate heat. Sprinklers supplied from dry systems in areas subject to freezing must be listed dry sprinklers, upright, or horizontal sidewall sprinklers installed so that water is not trapped. For dry systems, pendent sprinklers and sidewall sprinklers installed on return bends are permitted, where the sprinklers, return bend, and branch line piping are in an area maintained at or above 40 °F (4 °C).

B. Installation Instructions - Standard Spray Sprinklers

Viking sprinklers are manufactured and tested to meet the rigid requirements of approving agencies. They are designed to be installed in accordance with recognized installation standards. Deviation from the standards or any alteration to sprinklers or cover plate assemblies after they leave the factory including, but not limited to: painting, plating, coating, or modification, may render them inoperative and will automatically nullify the approvals and any guarantee made by The Viking Corporation.

The Viking Corporation, 210 N Industrial Park Drive, Hastings MI 49058
Telephone: 269-945-9501 Technical Services: 877-384-5464 Fax: 269-818-1680 Email: techsvcs@vikingcorp.com
Visit the Viking website for the latest edition of this technical data page.

Before installation, be sure to have the appropriate sprinkler model and style, with the correct K-Factor, temperature rating, and response characteristics. Sprinklers must be installed after the piping is in place to prevent mechanical damage. Keep sprinklers with protective caps or bulb shields contained within the caps or shields during installation and testing, and any time the sprinkler is shipped or handled.

1a. For frame-style sprinklers, install escutcheon (if used), which is designed to thread onto the external threads of the sprinkler. Refer to the appropriate sprinkler data page to determine approved escutcheons for use with specific sprinkler models.

1b. For flush and concealed style sprinklers: Cut the sprinkler nipple so that the ½" or 3/4" (15 mm or 20 mm)* NPT outlet of the reducing coupling is at the desired location, and centered in the opening* in the ceiling or wall.
*Size depends on the sprinkler model used. Refer to the sprinkler technical data page.

2. Apply a small amount of pipe-joint compound or tape to the external threads of the sprinkler only, taking care not to allow a build-up of compound in the sprinkler inlet. **NOTE:** Sprinklers with protective caps or bulb shields must have the caps or shields kept on them when applying pipe-joint compound or tape. *Exception: For domed concealed sprinklers, remove the protective cap for installation, and then place it back on the sprinkler temporarily..*

3. Refer to the appropriate sprinkler technical data page to determine the correct sprinkler wrench for the model of sprinkler used. DO NOT use the deflector or fusible element to start or thread the sprinkler into a fitting.
   a. Install the sprinkler onto the piping using the special sprinkler wrench only, taking care not to over-tighten or damage the sprinkler.
   b. For flush and concealed style sprinklers: the internal diameter of the special sprinkler installation wrench is designed for use with the sprinkler contained in the protective cap. *Exception: For domed concealed sprinklers, remove the protective cap for installation, and then place it back on the sprinkler temporarily.* Thread the flush or concealed sprinkler into the ½" or 3/4" (15 mm or 20 mm)* NPT outlet of the coupling by turning it clockwise with the special sprinkler wrench. *Thread size depends on the particular sprinkler model used. Refer to the sprinkler technical data page.

C. Installation Instructions - Dry Sprinklers

WARNING: Viking dry sprinklers are to be installed in the 1" outlet (for dry and preaction systems), or run of malleable, ductile iron, or Nibco CPVC* threaded tee fittings (for wet systems) that meet the dimensional requirements of ANSI B16.3 (Class 150), or cast iron threaded tee fittings that meet the dimensional requirements of ANSI B16.4 (Class 125), even at branch line ends. The threaded end of the dry sprinkler is designed to allow the seal to penetrate and extend into the fitting to a predetermined depth. This prevents condensation from accumulating and freezing over the sprinkler seal. ***NOTE: When using CPVC fittings with Viking dry sprinklers, use only new Nibco Model 5012-S-BI. When selecting other CPVC fittings, contact Viking Technical Services.**

1. **DO NOT** install the dry sprinkler into a threaded elbow, coupling, or any other fitting that could interfere with thread penetration. Such installation would damage the brass seal.
2. **DO NOT** install dry sprinklers into couplings or fittings that would allow condensation to accumulate above the seal when the sprinkler is located in an area subject to freezing.
3. **NEVER** try to modify dry sprinklers. They are manufactured for specific "A" or "B" dimensions and cannot be modified.

The dry sprinkler must be installed after the piping is in place to prevent mechanical damage. Before installation, be sure to have the correct sprinkler model and style, with the appropriate "A" or "B" dimension(s), temperature rating, orifice size, and response characteristics. Keep sprinklers with protective caps or bulb shields contained within the caps or shields during installation and testing, and any time the sprinkler is shipped or handled. *Exception:* For concealed and adjustable recessed dry sprinklers, the protective caps and shields are removed for installation.

To install the dry sprinkler, refer to the instructions below and the appropriate sprinkler technical data page for illustrated instructions.

Dry upright sprinklers must be installed above the piping, in the upright position only. When installing dry upright or plain barrel style vertical sidewall sprinklers on piping located close to the ceiling, it may be necessary to lower the sprinkler into the fitting from above the ceiling. When installing dry upright or plain barrel vertical sidewall sprinklers from below the ceiling, verify that the opening in the ceiling is a minimum 1-1/2" (38.1 mm) in diameter.

For dry upright or plain barrel vertical sidewall sprinklers in the upright position: First, install the escutcheon (if used) over the threaded end of the sprinkler barrel. Slide the escutcheon past the external threads. NOTE: When installing the dry upright or plain barrel vertical sidewall sprinkler from above the ceiling, it will be necessary to install the escutcheon after lowering the threaded end of the sprinkler through the ceiling penetration.

A. **For all dry sprinklers:** Apply a small amount of pipe-joint compound or tape to the external threads of the sprinkler barrel only, taking care not to allow a build-up of compound or tape over the brass inlet and seal. **NOTE:** Sprinklers with protective caps or bulb shields must be contained within the caps or shields before applying pipe-joint compound or tape.

The Viking Corporation, 210 N Industrial Park Drive, Hastings MI 49058
Telephone: 269-945-9501 Technical Services: 877-384-5464 Fax: 269-818-1680 Email: techsvcs@vikingcorp.com
Visit the Viking website for the latest edition of this technical data page.

B. Refer to the appropriate sprinkler technical data page to determine the correct sprinkler wrench for the model of sprinkler used.
C. Install the dry sprinkler on the piping using the special dry sprinkler wrench only, while taking care not to damage the sprinkler. **NOTE:** Thread the sprinkler into the fitting hand tight, plus 1/2 turn with the dry sprinkler wrench.
D. *For adjustable standard and adjustable recessed dry pendent and sidewall sprinklers: Escutcheons can be installed after the sprinklers have been installed onto the piping. Refer to the appropriate sprinkler technical data page for escutcheon installation instructions and illustrations.*

D. Installation Instructions - Testing

4. After installation, the entire sprinkler system must be tested. The test must be conducted to comply with the installation standards. Viking *high pressure* sprinklers may be hydrostatically tested at a maximum of 300 psi (20.7 bar) for limited periods of time (two hours), for the purpose of acceptance by the Authority Having Jurisdiction.
   a. Make sure the sprinkler is properly tightened. If a thread leak occurs, normally the sprinkler must be removed, new pipe-joint compound or tape applied, and then reinstalled. This is due to the fact that when the joint seal is damaged, the sealing compound or tape is washed out of the joint. Air testing [do not exceed 40 psi (2.76 bar)] the sprinkler piping prior to testing with water may be considered in areas where leakage during testing must be prevented. Refer to the Installation Standards and the Authority Having Jurisdiction.
   b. **Remove plastic protective sprinkler caps or bulb shields AFTER the wall or ceiling finish work is completed where the sprinkler is installed and there no longer is a potential for mechanical damage to the sprinkler operating elements.** To remove the bulb shields, simply pull the ends of the shields apart where they are snapped together. To remove caps from frame style sprinklers, turn the caps slightly and pull them off the sprinklers. **SPRINKLER CAPS OR BULB SHIELDS MUST BE REMOVED FROM SPRINKLERS BEFORE PLACING THE SYSTEM IN SERVICE!** Retain a protective cap or shield in the spare sprinkler cabinet.
5. For flush style sprinklers: the ceiling ring can now be installed onto the sprinkler body. Align the ceiling ring with the sprinkler body and thread or push it on (depends on sprinkler model) until the outer flange touches the surface of the ceiling. Note the maximum adjustment is 1/4" (6.35 mm). DO NOT MODIFY THE UNIT. If necessary, re-cut the sprinkler drop nipple as required.
6. For concealed sprinklers: the cover assembly can now be attached.
   a. Remove the cover from the protective box, taking care not to damage the cover plate assembly.
   b. Gently place the base of the cover plate assembly over the sprinkler protruding through the opening in the ceiling.
   c. Push the cover plate assembly onto the sprinkler until the unfinished brass flange of the cover plate base (or the cover adapter, if used) touches the surface of the ceiling.
   d. Refer to the applicable technical data sheet to determin the maximum adjustment available for concealed sprinklers. DO NOT MODIFY THE UNIT. If necessary, re-cut the sprinkler drop nipple.

NOTE: If it is necessary to remove the entire sprinkler unit, the system must be taken out of service. See section 6. INSPECTIONS, TESTS AND MAINTENANCE and follow all warnings and instructions.

5. OPERATION

Refer to the appropriate sprinkler technical data page(s). During fire conditions, the operating element fuses or shatters (depending on the type of sprinkler), releasing the pip cap and sealing assembly. Water flowing through the sprinkler orifice strikes the sprinkler deflector, forming a uniform spray pattern to extinguish or control the fire.

IMPORTANT: Always refer to Bulletin Form No. F_091699 - Care and Handling of Sprinklers. Viking sprinklers are to be installed in accordance with the latest edition of Viking technical data, the appropriate standards of NFPA, FM Global, LPCB, APSAD, VdS or other similar organizations, and also with the provisions of governmental codes, ordinances, and standards, whenever applicable. The sprinkler technical data page may contain installation requirements specific for the sprinkler model selected. The use of certain types of sprinklers may be limited due to occupancy and hazard. Refer to the Authority Having Jurisdiction prior to installation.

The Viking Corporation, 210 N Industrial Park Drive, Hastings MI 49058
Telephone: 269-945-9501 Technical Services: 877-384-5464 Fax: 269-818-1680 Email: techsvcs@vikingcorp.com
Visit the Viking website for the latest edition of this technical data page.

6. INSPECTIONS, TESTS AND MAINTENANCE

NOTICE: Refer to NFPA 25 for Inspection, Testing and Maintenance requirements. **NOTICE:** The owner is responsible for having the fire-protection system and devices inspected, tested, and maintained in proper operating condition in accordance with this guide, and applicable NFPA standards. In addition, the Authority Having Jurisdiction may have additional maintenance, testing, and inspection requirements that must be followed.

A. Sprinklers must be inspected on a regular basis for corrosion, mechanical damage, obstructions, paint, etc. Frequency of inspections may vary due to corrosive atmospheres, water supplies, and activity around the sprinkler unit.

B. Sprinklers or cover plate assemblies that have been field painted, caulked, or mechanically damaged must be replaced immediately. Sprinklers showing signs of corrosion shall be tested and/or replaced immediately as required. Installation standards require sprinklers to be tested and, if necessary, replaced after a specified term of service. Refer to NFPA 25 and the Authority Having Jurisdiction for the specified period of time after which testing and/or replacement is required. Never attempt to repair or reassemble a sprinkler. Sprinklers and cover assemblies that have operated cannot be reassembled or re-used, but must be replaced. When replacement is necessary, use only new sprinklers and cover assemblies with identical performance characteristics.

C. The sprinkler discharge pattern is critical for proper fire protection. Therefore, nothing should be hung from, attached to, or otherwise obstruct the discharge pattern. All obstructions must be immediately removed or, if necessary, additional sprinklers installed.

D. When replacing existing sprinklers, the system must be removed from service. Refer to the appropriate system description and/or valve instructions. Prior to removing the system from service, notify all Authorities Having Jurisdiction. Consideration should be given to employment of a fire patrol in the affected area.

1. Remove the system from service, drain all water, and relieve all pressure on the piping.

2a. For frame-style sprinklers, use the special sprinkler wrench to remove the old sprinkler by turning it counterclockwise to unthread it from the piping.

2b. For flush and concealed style sprinklers: Remove the ceiling ring or cover plate assembly before unthreading the sprinkler body from the piping. Ceiling rings and cover plates can be removed either by gently unthreading them or pulling them off the sprinkler body (depends on the sprinkler model used). After the ceiling ring or cover plate assembly has been removed from the sprinkler body, place the plastic protective cap (from the spare sprinkler cabinet) over the sprinkler to be removed and then fit the sprinkler wrench over the cap. Then use the wrench to unthread the sprinkler from the piping. *Exception: Domed concealed sprinklers are removed without the plastic cap.*

3. Install the new sprinkler unit by following the instructions in section 4. INSTALLATION. Care must be taken to ensure that the replacement sprinkler is the proper model and style, with the correct K-Factor, temperature rating, and response characteristics. A fully stocked spare sprinkler cabinet should be provided for this purpose. For flush or concealed sprinklers: stock of spare ceiling rings or cover plates should also be available in the spare sprinkler cabinet.

E. Place the system back in service and secure all valves. Check for and repair all leaks. Sprinkler systems that have been subjected to a fire must be returned to service as soon as possible. The entire system must be inspected for damage, and repaired or replaced as necessary. Sprinklers that have been exposed to corrosive products of combustion or high ambient temperatures, but have not operated, should be replaced. Refer to the Authority Having Jurisdiction for minimum replacement requirements.

7. AVAILABILITY

Viking sprinklers are available through a network of domestic and international distributors. See The Viking Corporation web site for the closest distributor or contact The Viking Corporation.

8. GUARANTEE

For details of warranty, refer to Viking's current list price schedule or contact Viking directly.

BULLETIN

REGULATORY AND HEALTH WARNINGS

The Viking Corporation, 210 N Industrial Park Drive, Hastings MI 49058
Telephone: 269-945-9501 Technical Services: 877-384-5464 Fax: 269-818-1680 Email: techsvcs@vikingcorp.com
Visit the Viking website for the latest edition of this technical data page www.vikinggroupinc.com

1. DESCRIPTION

Regulatory and Health Warnings applying to materials used in the manufacture and construction of fire protection products are provided herin as they relate to legally mandated jurisdictional regions.

⚠ WARNING

STATE OF CALIFORNIA, USA

Installing or servicing fire protection products such as sprinklers, valves, piping etc. can expose you to chemicals including, but not limited to, lead, nickel, butadiene, titaninum dioxide, chromium, carbon black, and acrylonitrile which are known to the State of California to cause cancer or birth defects or other reproductive harm.

For more information, go to **www.P65Warnings.ca.gov**

2. WARRANTY TERMS AND CONDITIONS

For details of warranty, refer to Viking's current list price schedule at **www.vikinggroupinc.com** or contact Viking directly.