TECHNICAL DATA

MIRAGE® QUICK RESPONSE CONCEALED PENDENT MRI SPRINKLERS (K5.6 & 8.0)

The Viking Corporation, 210 N Industrial Park Drive, Hastings MI 49058
Telephone: 269-945-9501 Technical Services: 877-384-5464 Fax: 269-818-1680 Email: techsvcs@vikingcorp.com
Visit the Viking website for the latest edition of this technical data page.

1. DESCRIPTION

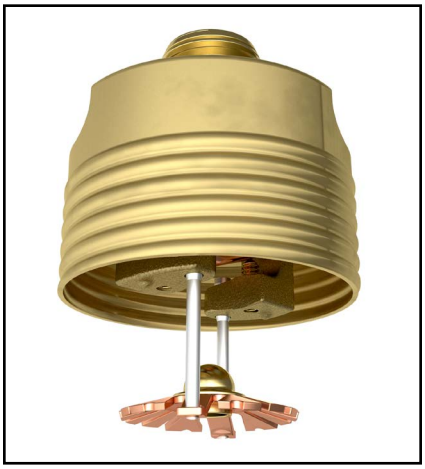

Viking Mirage® Quick Response Concealed MRI Sprinklers are intended for use inside an MRI environment, such as the MR system room. They are not intended to be used within the bore of the MR scanner itself. This sprinkler has been independently tested for use with a 3-Tesla MR system in accordance with ASTM F2052-15 criteria. The results of this test demonstrate that this product is acceptable for use in an environment with a static magnetic field of 3-Tesla or less and the highest spatial gradient magnetic field of 330-Gauss/cm or less.

The sprinkler is pre-assembled with a threaded adapter for installation with a low-profile cover assembly that provides up to ½" (13 mm) of vertical adjustment. The two-piece design allows installation and testing of the sprinkler prior to installation of the cover plate. The The "push-on" and "thread-on" designs of the concealed cover plate assemblies allow easy installation of the cover plate after the system has been tested and the ceiling finish has been applied. The cover assembly can be removed and reinstalled, allowing temporary removal of ceiling panels without taking the sprinkler system out of service or removing the sprinkler.

WARNING: Cancer and Reproductive Harm- www.P65Warnings.ca.gov

2. LISTINGS AND APPROVALS

cULus Listed: Category VNIV

CE: Standard EN12259-1, DOP_VK462MRI_22-9-20

Refer to the Approval Chart and Design Criteria for cULus Listing requirements that must be followed.

3. TECHNICAL DATA

Specifications:
Available since 2008.
Minimum Operating Pressure: 7 psi (0.5 bar)
Maximum Working Pressure: 175 psi (12 bar). Factory tested hydrostatically to 500 psi (34.5 bar).
Thread size: 1/2" (15 mm) or 3/4" (20 mm) NPT
Nominal K-Factor: 5.6 U.S. (80.6 metric*) or 8.0 U.S. (115.2 metric*)
*Metric K-factor measurement shown is when pressure is measured in Bar. When pressure is measured in kPa, divide the metric K-factor shown by 10.0.
Glass-bulb fluid temperature rated to -65 °F (-55 °C)
Patents Pending

Material Standards:
Sprinkler Body: Brass UNS-C84400
Deflector: Phosphor Bronze UNS-C51000
Deflector Pins: Stainless Steel Alloy
Bulb: Glass, nominal 3 mm diameter
Pip Cap and Insert Assembly: Copper UNS-C11000 and Stainless Steel UNS-S30400
Button: Brass UNS-C36000
Screws: 18-8 Stainless Steel
Belleville Spring Sealing Assembly: Nickel Alloy, coated on both sides with Teflon Tape
Yoke: Phosphor Bronze UNS-C51000
Cover Adapter: Brass UNS-C26800

Cover Assembly Materials:
Cover: Copper UNS-C11000
Base: Brass UNS-C26800 or UNS-C26000
Springs: Nickel Alloy
Solder: Eutectic

Ordering Information: The sprinkler and cover plate must be ordered separately. Refer to Tables 1 and 2.

The Viking Corporation, 210 N Industrial Park Drive, Hastings MI 49058
Telephone: 269-945-9501 Technical Services: 877-384-5464 Fax: 269-818-1680 Email: techsvcs@vikingcorp.com
Visit the Viking website for the latest edition of this technical data page.

4. INSTALLATION

Refer to appropriate NFPA Installation Standards.

5. OPERATION

During fire conditions, when the temperature around the sprinkler approaches its operating temperature, the cover plate detaches. Continued heating of the exposed sprinkler causes the heat-sensitive liquid in the glass bulb to expand and the bulb to shatter, releasing the yoke, pip-cap and sealing spring assembly. Water flowing through the sprinkler orifice strikes the sprinkler deflector, forming a uniform spray pattern to extinguish or control the fire.

6. INSPECTIONS, TESTS AND MAINTENANCE

Refer to NFPA 25 for Inspection, Testing and Maintenance requirements.

7. AVAILABILITY

Viking Sprinklers VK462 and VK464 are available through a network of domestic and international distributors. See The Viking Corporation web site for the closest distributor or contact The Viking Corporation.

8. GUARANTEE

For details of warranty, refer to Viking's current list price schedule or contact Viking directly.

TECHNICAL DATA

MIRAGE® QUICK RESPONSE CONCEALED PENDENT MRI SPRINKLERS (K5.6 & 8.0)

The Viking Corporation, 210 N Industrial Park Drive, Hastings MI 49058
Telephone: 269-945-9501 Technical Services: 877-384-5464 Fax: 269-818-1680 Email: techsvcs@vikingcorp.com
Visit the Viking website for the latest edition of this technical data page.

Ordering Instructions - Sprinkler Base

1. Choose a sprinkler base part number with the required thread size and listing or approval (refer to the approval chart).
2. Add the suffix for the desired finish.
3. Add the suffix for the desired temperature rating.
4. Order a cover plate (refer to Ordering Instructions - Cover Plate).

Example:
15480AE = 200 °F (93 °C) Temperature Rated Sprinkler with a standard Brass finish.

NOTE: If ordering the MRI sprinkler by referring to the SIN, be sure to specify "MRI".

1. Sprinkler Base Part Numbers[1]

Part Number	Thread Size
15480A	½" NPT
15481A	¾" NPT

2. Temperature Ratings

Sprinkler Temperature Classification	Temperature Rating	Bulb Color	Maximum Ambient Ceiling Temperature[2]	Suffix
Ordinary	155 °F (68 °C)	Red	100 °F (38 °C)	B
Intermediate	175 °F (79 °C)	Yellow	150 °F (68 °C)	D
Intermediate	200 °F (93°C)	Green	150 °F (68 °C)	E

Accessories

Part Number	Description
14047W/B	Heavy-duty wrench (available since 2006)[3]
14031	Head cabinet wrench (available since 2006)[4]
14412	Optional concealed cover plate installer tool (available since 2007)[5]
14867	Optional large concealed cover plate installer tool (available since 2007)[5]
01731A	Sprinkler cabinet; holds up to 6 sprinklers (available since 1971)

FOOTNOTES

1. Where a dash (-) is shown in the Finish suffix designation, insert the desired temperature rating suffix. See example above.
2. Based on NFPA 13, NFPA 13R, and NFPA 13D. Other limits may apply, depending on fire loading, sprinkler location, and other requirements of the Authority Having Jurisdiction. Refer to specific installation standards.
3. Requires a 1/2" ratchet which is not available from Viking.
4. Also optional for removal of the protective cap. Ideal for sprinkler cabinets.
5. The installer tool is for push-on style cover plates only.

TECHNICAL DATA

MIRAGE® QUICK RESPONSE CONCEALED PENDENT MRI SPRINKLERS (K5.6 & 8.0)

The Viking Corporation, 210 N Industrial Park Drive, Hastings MI 49058
Telephone: 269-945-9501 Technical Services: 877-384-5464 Fax: 269-818-1680 Email: techsvcs@vikingcorp.com
Visit the Viking website for the latest edition of this technical data page.

Ordering Instructions - Cover Plate

1. Choose a cover plate base part number with the desired shape and style (refer to the approval chart).
2. Add the suffix for the desired finish.
3. Add the suffix for the required temperature rating.

Example:
23190MC/W = 165 °F (74 °C) Temperature Rated, 2-3/4" (70 mm) diameter, Thread-On style Round Cover Plate with a Painted White finish.

1. Cover Plate Base Part Numbers[1, 2]

Style	Base Part Number	Size Inches (mm)	Shape
Thread-On Style	23190	2-3/4 (70)	Round
	23174	3-5/16 (84)	Round
	23174-/CR	3-5/16 (84)	Round
Push-On Style	23447	2-3/4 (70)	Round
	23463	3-5/16 (84)	Round
	23463-/CR	3-5/16 (84)	Round

2. Available Finishes[3]

Description	Suffix
Polished Chrome	F
Brushed Chrome	F-/B
Bright Brass	B
Antique Brass	B-/A
Brushed Brass	B-/B
Brushed Copper	E-/B
Painted White	M-/W
Painted Ivory	M-/I
Painted Black	M-/B

3. Temperature Rating Matrix[4, 5]

The required cover plate temperature rating is determinted by the sprinkler's temperature rating.

Sprinkler Temperature Classification[4]	Required Cover Plate Temperature Rating	Corresponding Sprinkler Nominal Temperature Rating	Maximum Ambient Ceiling Temperature	Suffix
Ordinary	139 °F (59 °C)	155 °F (68 °C)	100 °F (38 °C)	A
Intermediate	165 °F (74 °C)	175 °F (79 °C)	150 °F (65 °C)	C
Intermediate	165 °F (74 °C)	200 °F (93 °C)	150 °F (65 °C)	C

FOOTNOTES

1. For complete part number, refer to current Viking price list schedule.
2. For cleanroom cover plate part numbers and approval details, see the Cleanroom Sprinkler Cover Assembly technical data sheet.
3. Where a dash (-) is shown in the Finish suffix designation, insert the desired Temperature Rating suffix. See example above.
4. The sprinkler temperature rating is stamped on the deflector.
5. Based on NFPA-13. Other limits may apply, depending on fire loading, sprinkler location, and other requirements of the Authority Having Jurisdiction. Refer to specific installation standards.

TECHNICAL DATA

MIRAGE® QUICK RESPONSE CONCEALED PENDENT MRI SPRINKLERS (K5.6 & 8.0)

The Viking Corporation, 210 N Industrial Park Drive, Hastings MI 49058
Telephone: 269-945-9501 Technical Services: 877-384-5464 Fax: 269-818-1680 Email: techsvcs@vikingcorp.com
Visit the Viking website for the latest edition of this technical data page.

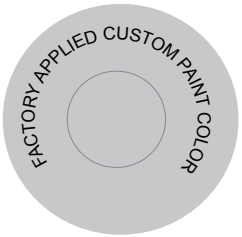

All custom color painted cover plates will have an identifying label affixed to the inside of the cover that indicates the custom color and will have a representative sample (a paint dot) of the paint on the label.

Figure 1: Identification of Custom Paint for Concealed Covers

Approval Chart

Mirage® Quick Response Concealed Pendent MRI Sprinklers

Sprinkler Temperature Rating
Cover Plate Temperature Rating
AW1 ← Cover Plate Finish **KEY**

Sprinkler Base Part Number[1]	SIN	NPT Thread Size		Nominal K-Factor		Maximum Water Working Pressure	Listings and Approvals[3] (Refer also to Design Criteria.)	
		Inch	mm	U.S.	metric[2]		cULus[4, 8]	CE[7]
15480A	VK462	1/2”	15	5.6	80.6	175 psi (12 bar)	AW1, BX1	AW1, BX1
15481A	VK464	3/4”	20	8.0	115.2	175 psi (12 bar)	AW1, BX1	--

Sprinkler Temperature Ratings
A - 155°F (68°C)
B - 175°F (79°C) and 200°F (93°C)

Cover Plate Assembly Temperature Ratings[5]
W - 139°F (59°C) cover 23190, 23447 or 23174, 23463 (large diameter)
X - 165°F (74°C) cover 23190, 23447 or 23174, 23463 (large diameter)

Cover Plate Assembly Finishes[6]
1 - Polished Chrome, Brushed Chrome, Bright Brass, Antique Brass, Brushed Brass, Brushed Copper, Painted White, Painted Ivory, or Painted Black

Footnotes

1. Part number shown is the base part number. For complete part number, refer to current Viking price list schedule.
2. Metric K-factor measurement shown is when pressure is measured in Bar. When pressure is measured in kPa, divide the metric K-factor shown by 10.0.
3. This chart shows the listings and approvals available at the time of printing. Other approvals may be in process. Check with the manufacturer for any additional approvals.
4. Listed by Underwriter’s Laboratories for use in the U.S. and Canada.
5. The 139°F (59°F) cover has an orange label. The 165°F (74°C) cover has a white label.
6. Painted finish consists of Polyester Baked Enamel. Other paint colors are available on request with the same listings as the standard paint colors. Listings and approvals apply for any paint manufacturer. Contact Viking for additional information.
7. CE: Standard EN 12259-1, Declaration of Performance DOP_VK462MRI_22-9-20.
8. Refer to the Cleanroom Sprinkler Cover Assembly technical data sheet for Viking’s UL Listed cover plates with built-in gaskets.

NOTE: Custom colors are indicated on a label inside the cover assembly. Refer to Figure 1.

VIKING	TECHNICAL DATA	MIRAGE® QUICK RESPONSE CONCEALED PENDENT MRI SPRINKLERS (K5.6 & 8.0)

The Viking Corporation, 210 N Industrial Park Drive, Hastings MI 49058
Telephone: 269-945-9501 Technical Services: 877-384-5464 Fax: 269-818-1680 Email: techsvcs@vikingcorp.com
Visit the Viking website for the latest edition of this technical data page.

DESIGN CRITERIA

(Also refer to the Approval Chart.)

cULus Listing Requirements:

Mirage® Concealed Pendent MRI Sprinklers were subjected to magnetic field interaction testing and determined to be MRI conditional according to the terminology specified in ASTM International, Designation F2502-15. These sprinklers are intended for use in a high magnetic field environment according to the following conditions:

1. Static magnetic field of 3-Tesla or less
2. Highest spatial gradient magnetic field of 330-Gauss/cm or less

Sprinklers VK462 and VK464 are cULus Listed for installation in accordance with the latest edition of NFPA 13 for standard coverage pendent spray sprinklers as indicated below.

- For hazard occupancies up to and including Ordinary Hazard, Group II.
- Protection areas and maximum spacing shall be in accordance with the tables provided in NFPA 13. Maximum spacing allowed is 15 ft. (4.6 m).
- Minimum spacing allowed is 6 ft. (1.8 m) unless baffles are installed in accordance with NFPA 13.
- Minimum distance from walls is 4 in. (102 mm).
- Maximum distance from walls shall be no more than one-half of the allowable distance between sprinklers. The distance shall be measured perpendicular to the wall.
- The sprinkler obstruction rules contained in NFPA 13 for standard coverage pendent spray sprinklers must be followed.

NOTE: Concealed sprinklers must be installed in neutral or negative pressure plenums only.

IMPORTANT: Always refer to Bulletin Form No. F_091699 - Care and Handling of Sprinklers. Also refer to Bulletin Form No. F_080614 for general care, installation, and maintenance information. Viking sprinklers are to be installed in accordance with the latest edition of Viking technical data, the appropriate standards of NFPA, FM Global, LPCB, APSAD, VdS or other similar organizations, and also with the provisions of governmental codes, ordinances, and standards, whenever applicable.

VIKING

TECHNICAL DATA

MIRAGE® QUICK RESPONSE CONCEALED PENDENT MRI SPRINKLERS (K5.6 & 8.0)

The Viking Corporation, 210 N Industrial Park Drive, Hastings MI 49058
Telephone: 269-945-9501 Technical Services: 877-384-5464 Fax: 269-818-1680 Email: techsvcs@vikingcorp.com
Visit the Viking website for the latest edition of this technical data page.

Sprinkler and Adapter Assembly
- **Protective cap removed**
- **Use wrench 14031****

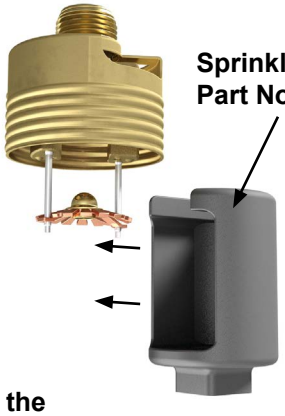

Sprinkler Wrench Part No. 14047W/B**

Step 1:
Carefully slide the wrench sideways around the deflector and pins

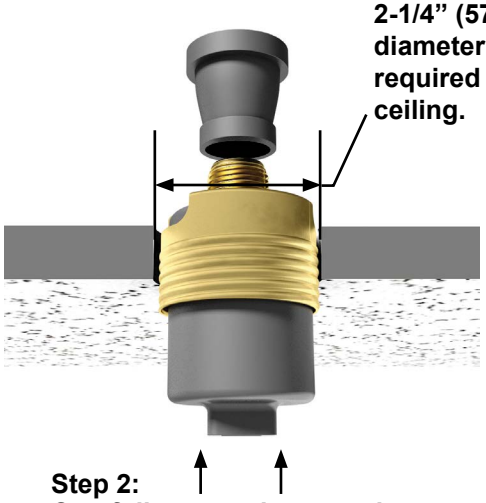

2-1/4" (57 mm) diameter opening required in the ceiling.

Step 2:
Carefully press the wrench upward and turn slightly to ensure engagement with the sprinkler wrench flats.

- **NEVER install the sprinkler by applying the installation wrench across the frame arms.**
- **DO NOT overtighten.**
- **Use only the designated sprinkler wrenches, Viking Part Numbers 14047W/B or 14031**.**
- **A leak tight seal should be achieved by turning the sprinkler clockwise 1 to 1-1/2 turns beyond finger tight.**

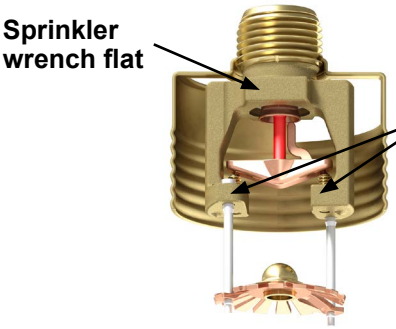

Sprinkler wrench flat

Sprinkler frame arms

Figure 2: Sprinkler Installation and Proper Wrench Usage (Sprinkler VK462 Shown)

** **A 1/2" ratchet is required (Not available from Viking)**

The Viking Corporation, 210 N Industrial Park Drive, Hastings MI 49058
Telephone: 269-945-9501 Technical Services: 877-384-5464 Fax: 269-818-1680 Email: techsvcs@vikingcorp.com
Visit the Viking website for the latest edition of this technical data page.

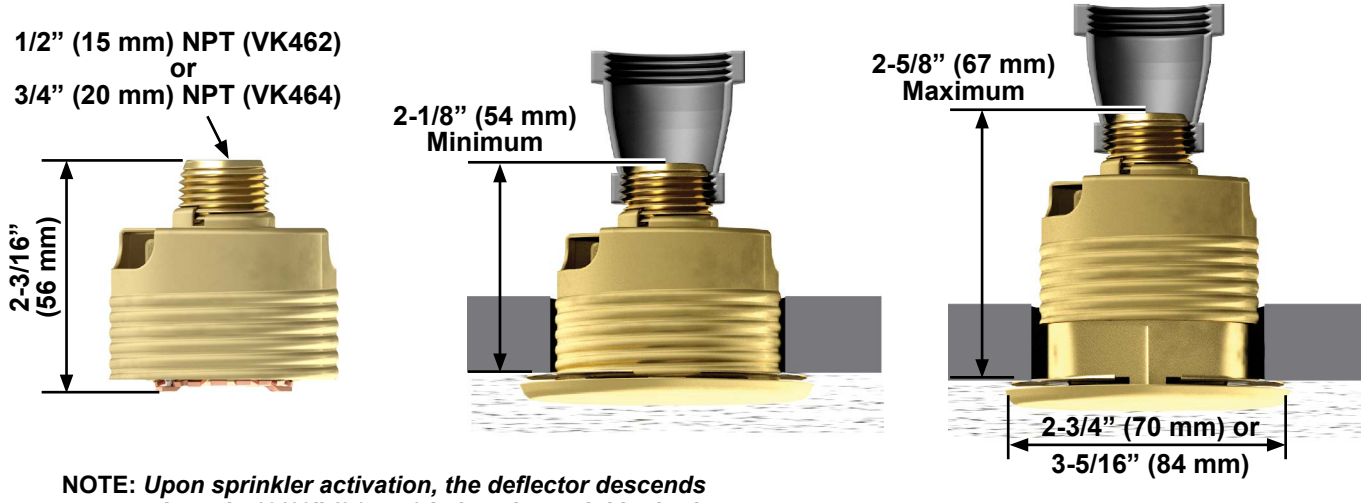

NOTE: ***Upon sprinkler activation, the deflector descends to approximately 13/16” (21 mm) below the sprinkler body.***

Figure 3: Sprinkler Dimensions and Cover Installation (Sprinkler VK462 Shown)

VIKING

BULLETIN

CARE AND HANDLING OF SPRINKLERS

The Viking Corporation, 210 N Industrial Park Drive, Hastings MI 49058
Telephone: 269-945-9501 Technical Services: 877-384-5464 Fax: 269-818-1680 Email: techsvcs@vikingcorp.com

SPRINKLERS ARE FRAGILE - HANDLE WITH CARE!

General Handling and Storage:

- Store sprinklers in a cool, dry place.
- Protect sprinklers during storage, transport, handling, and after installation.
- Use the original shipping containers. DO NOT place sprinklers loose in boxes, bins, or buckets.
- Keep sprinklers separated at all times. DO NOT allow metal parts to contact sprinkler operating elements.

For Pre-Assembled Drops:

- Protect sprinklers during handling and after installation.
- For recessed assemblies, use the protective sprinkler cap (Viking Part Number 10364).

Sprinklers with Protective Shields or Caps:

- DO NOT remove shields or caps until after sprinkler installation and there no longer is potential for mechanical damage to the sprinkler operating elements.
- **Sprinkler shields or caps MUST be removed BEFORE placing the system in service!**
- Remove the sprinkler shield by carefully pulling it apart where it is snapped together.
- Remove the cap by turning it slightly and pulling it off the sprinkler.

Sprinkler Installation:

- DO NOT use the sprinkler deflector or operating element to start or thread the sprinkler into a fitting.
- **Use only the designated sprinkler head wrench!** Refer to the current sprinkler technical data page to determine the correct wrench for the model of sprinkler used.
- DO NOT install sprinklers onto piping at the floor level.
- Install sprinklers after the piping is in place to prevent mechanical damage.
- DO NOT allow impacts such as hammer blows directly to sprinklers or to fittings, pipe, or couplings in close proximity to sprinklers. Sprinklers can be damaged from direct or indirect impacts.
- DO NOT attempt to remove drywall, paint, etc., from sprinklers.
- **Take care not to over-tighten the sprinkler and/or damage its operating parts!**

  Maximum Torque:
  1/2" NPT: 14 ft-lbs. (19.0 N-m)
  3/4" NPT: 20 ft-lbs. (27.1 N-m)
  1" NPT: 30 ft-lbs. (40.7 N-m)



CORRECT
(Original container used)



INCORRECT
(Placed loose in box)

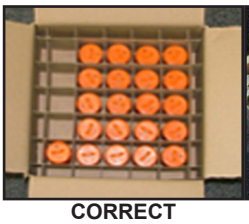

CORRECT
(Protected with caps)



INCORRECT
(Protective caps not used)

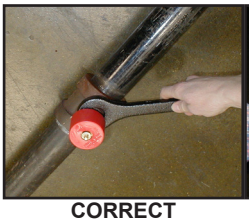

CORRECT
(Piping is in place at the ceiling)



INCORRECT
(Sprinkler at floor level)



CORRECT
(Special installation wrenches)



INCORRECT
(Designated wrench not used)

WARNING: Cancer and Reproductive Harm-
www.P65Warnings.ca.gov

⚠ WARNING

Any sprinkler with a loss of liquid from the glass bulb or damage to the fusible element should be destroyed. Never install sprinklers that have been dropped, damaged, or exposed to temperatures exceeding the maximum ambient temperature allowed. Sprinklers that have been painted in the field must be replaced per NFPA 13. Protect sprinklers from paint and paint overspray in accordance with the installation standards. Do not clean sprinklers with soap and water, ammonia, or any other cleaning fluid. Do not use adhesives or solvents on sprinklers or their operating elements.

Refer to the appropriate technical data page and NFPA standards for complete care, handling, installation, and maintenance instructions. For additional product and system information Viking data pages and installation instructions are available on the Viking Web site at www.vikinggroupinc.com.

VIKING | BULLETIN | CARE AND HANDLING OF SPRINKLERS

The Viking Corporation, 210 N Industrial Park Drive, Hastings MI 49058
Telephone: 269-945-9501 Technical Services: 877-384-5464 Fax: 269-818-1680 Email: techsvcs@vikingcorp.com

PROTECTIVE SPRINKLER SHIELDS AND CAPS

General Handling and Storage:

Many Viking sprinklers are available with a plastic protective cap or shield temporarily covering the operating elements. The snap-on shields and caps are factory installed and are intended to help protect the operating elements from mechanical damage during shipping, storage, and installation. NOTE: It is still necessary to follow the care and handling instructions on the appropriate sprinkler technical data sheets* when installing sprinklers with bulb shields or caps.

WHEN TO REMOVE THE SHIELDS AND CAPS:

NOTE: SHIELDS AND CAPS MUST BE REMOVED FROM SPRINKLERS BEFORE PLACING THE SYSTEM IN SERVICE!

Remove the shield or cap from the sprinkler only after checking all of the following:

- The sprinkler has been installed*.
- The wall or ceiling finish work is completed where the sprinkler is installed and there no longer is a potential for mechanical damage to the sprinkler operating elements.

SHIELDS AND CAPS MUST BE REMOVED FROM SPRINKLERS BEFORE PLACING THE SYSTEM IN SERVICE!

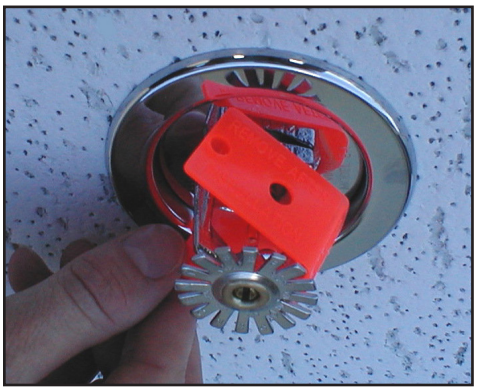

Figure 1: Sprinkler shield being removed from a pendent sprinkler.



Figure 2: Sprinkler cap being removed from a pendent sprinkler.

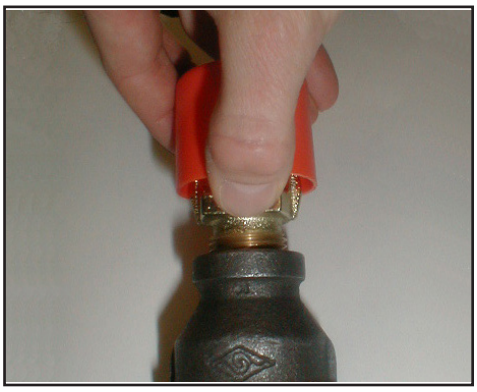

Figure 3: Sprinkler cap being removed from and upright sprinkler.

HOW TO REMOVE SHIELDS AND CAPS:

No tools are necessary to remove the shields or caps from sprinklers. DO NOT use any sharp objects to remove them! **Take care not to cause mechanical damage to sprinklers when removing the shields or caps.** When removing caps from fusible element sprinklers, use care to prevent dislodging ejector springs or damaging fusible elements. NOTE: Squeezing the sprinkler cap excessively could damage sprinkler fusible elements.

- To remove the shield, simply pull the ends of the shield apart where it is snapped together. Refer to Figure 1.
- To remove the cap, turn it slightly and pull it off the sprinkler. Refer to Figures 2 and 3.

NOTICE Refer to the current sprinkler technical data page to determine the correct sprinkler wrench for the model of sprinkler used.

⚠WARNING Never install sprinklers that have been dropped, damaged, or exposed to temperatures in excess of the maximum ambient temperature allowed.

*** Refer to the appropriate current technical data pages for complete care, handling, and installation instructions. Data pages are included with each shipment from Viking or Viking distributors. They can also be found on the Web site at www.vikinggroupinc.com.**

BULLETIN

CARE AND HANDLING OF SPRINKLERS

The Viking Corporation, 210 N Industrial Park Drive, Hastings MI 49058
Telephone: 269-945-9501 Technical Services: 877-384-5464 Fax: 269-818-1680 Email: techsvcs@vikingcorp.com

CAUTION CONCEALED COVER ASSEMBLIES ARE FRAGILE!
TO ASSURE SATISFACTORY PERFORMANCE OF THE PRODUCT, HANDLE WITH CARE.

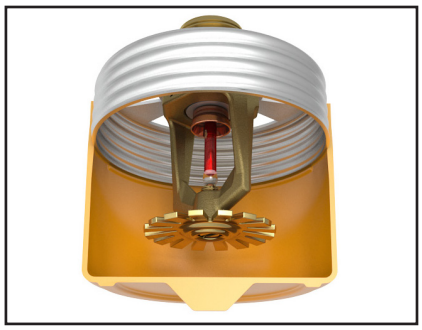

Concealed Sprinkler and Adapter Assembly with Protective Cap

Concealed Sprinkler and Adapter Assembly (Protective Cap Removed)



Cover Plate Assembly (Pendent Cover 12381 shown)



GENERAL HANDLING AND STORAGE INSTRUCTIONS:

- Do not store in temperatures exceeding 100 °F (38 °C). Avoid direct sunlight and confined areas subject to heat.
- Protect sprinklers and cover assemblies during storage, transport, handling, and after installation.
  -- Use original shipping containers.
  -- Do not place sprinklers or cover assemblies loose in boxes, bins, or buckets.
- Keep the sprinkler bodies covered with the protective sprinkler cap any time the sprinklers are shipped or handled, during testing of the system, and while ceiling finish work is being completed.
- Use only the designated Viking recessed sprinkler wrench (refer to the appropriate sprinkler data page) to install these sprinklers. **NOTE:** The protective cap is temporarily removed during installation and then placed back on the sprinkler for protection until finish work is completed.
- Do not over-tighten the sprinklers into fittings during installation.
- Do not use the sprinkler deflector to start or thread the sprinklers into fittings during installation.
- Do not attempt to remove drywall, paint, etc., from the sprinklers.
- Remove the plastic protective cap from the sprinkler before attaching the cover plate assembly. **PROTECTIVE CAPS MUST BE REMOVED FROM SPRINKLERS BEFORE PLACING THE SYSTEM IN SERVICE!**

Refer to the appropriate current technical data pages for complete care, handling, and installation instructions. Data pages are included with each shipment from Viking or Viking distributors. They can also be found on the Web site at www.vikinggroupinc.com.

VIKING

BULLETIN

CARE AND HANDLING OF SPRINKLERS

The Viking Corporation, 210 N Industrial Park Drive, Hastings MI 49058
Telephone: 269-945-9501 Technical Services: 877-384-5464 Fax: 269-818-1680 Email: techsvcs@vikingcorp.com

USE THE FOLLOWING PRECAUTIONS WHEN HANDLING WAX-COATED SPRINKLERS

Many of Viking's sprinklers are available with factory-applied wax coating for corrosion resistance. These sprinklers MUST receive appropriate care and handling to avoid damaging the wax coating and to assure satisfactory performance of the product.

General Handling and Storage of Wax-Coated Sprinklers:

- Store the sprinklers in a cool, dry place (in temperatures below the maximum ambient temperature allowed for the sprinkler temperature rating. Refer to Table 1 below.)
- Store containers of wax-coated sprinklers separate from other sprinklers.
- Protect the sprinklers during storage, transport, handling, and after installation.
- Use original shipping containers.
- Do not place sprinklers in loose boxes, bins, or buckets.

Installation of Wax-Coated Sprinklers:

Use only the special sprinkler head wrench designed for installing wax-coated Viking sprinklers (any other wrench may damage the unit).

- Take care not to crack the wax coating on the units.
- For touching up the wax coating after installation, wax is available from Viking in bar form. Refer to Table 1 below. The coating MUST be repaired after sprinkler installation to protect the corrosion-resistant properties of the sprinkler.
- Use care when locating sprinklers near fixtures that can generate heat. Do not install sprinklers where they would be exposed to temperatures exceeding the maximum recommended ambient temperature for the temperature rating used.
- Inspect the coated sprinklers frequently soon after installation to verify the integrity of the corrosion resistant coating. Thereafter, inspect representative samples of the coated sprinklers in accordance with NFPA 25. Close up visual inspections are necessary to determine whether the sprinklers are being affected by corrosive conditions.

TABLE 1

Sprinkler Temperature Rating (Fusing Point)	Wax Part Number	Wax Melting Point	Maximum Ambient Ceiling Temperature[1]	Wax Color
155 °F (68 °C) / 165 °F (74 °C)	02568A	148 °F (64 °C)	100 °F (38 °C)	Light Brown
175 °F (79 °C)	04146A	161 °F (71 °C)	150 °F (65 °C)	Brown
200 °F (93 °C)	04146A	161 °F (71 °C)	150 °F (65 °C)	Brown
220 °F (104 °C)	02569A	170 °F (76 °C)	150 °F (65 °C)	Dark Brown
286 °F (141 °C)	02569A	170 °F (76 °C)	150 °F (65 °C)	Dark Brown

[1] Based on NFPA-13. Other limits may apply, depending on fire loading, sprinkler location, and other requirements of the Authority Having Jurisdiction. Refer to specific installation standards.

⚠WARNING Never install sprinklers that have been dropped, damaged, or exposed to temperatures in excess of the maximum ambient temperature allowed.

Refer to the appropriate current technical data pages for complete care, handling, and installation instructions. Data pages are included with each shipment from Viking or Viking distributors. They can also be found on the Web site at www.vikinggroupinc.com.

TECHNICAL DATA — SPRINKLER OVERVIEW

The Viking Corporation, 210 N Industrial Park Drive, Hastings MI 49058
Telephone: 269-945-9501 Technical Services: 877-384-5464 Fax: 269-818-1680 Email: techsvcs@vikingcorp.com

1. DESCRIPTION

Viking fire sprinklers consist of a threaded frame with a specific waterway or orifice size and a deflector for distributing water in a specified pattern. A closed or sealed sprinkler refers to a complete assembly, including the thermosensitive operating element. An open sprinkler does not use an operating element and is open at all times. The distribution of water is intended to extinguish a fire or to control its spread.

Viking sprinklers are available in several models and styles. Refer to specific sprinkler technical data pages for available styles, finishes, temperature ratings, thread sizes, and nominal K-Factors for the particular model selected.

2. LISTINGS AND APPROVALS

Refer to the Approval Charts on the appropriate sprinkler technical data page(s) and/or approval agency listings.

WARNING: Cancer and Reproductive Harm- www.P65Warnings.ca.gov

3. TECHNICAL DATA

Pressure Ratings:

Maximum allowable water working pressure is 175 psig (12 Bar) unless rated and specified for high water working pressure [250 psig (17.2 bar)].

Sprinkler Identification:

Viking sprinklers are identified and marked with the word “Viking”, the sprinkler identification number (SIN) consisting of “VK” plus a three digit number*, the model letter, and the year of manufacture.

Available Finishes:

Viking sprinklers are available in several decorative finishes. Some models are available with corrosion-resistant coatings or are fabricated from non-corrosive material. Refer to the sprinkler technical data page for additional information.

Available Temperature Ratings:

Viking sprinklers are available in several temperature ratings that relate to a specific temperature classification. Applicable installation rules mandate the use and limitations of each temperature classification. In selecting the appropriate temperature classification, the maximum expected ceiling temperature must be known. When there is doubt as to the maximum temperature at the sprinkler location, a maximum-reading thermometer should be used to determine the temperature under conditions that would show the highest readings to be expected. In addition, recognized installation rules may require a higher temperature classification, depending upon sprinkler location, occupancy classification, commodity classification, storage height, and other hazards. In all cases, the maximum expected ceiling temperature dictates the lowest allowable temperature classification. Sprinklers located immediately adjacent to a heat source may require a higher temperature rating.

K-Factors:

Viking sprinklers are available in several orifice sizes with related K-Factors. The orifice is a tapered waterway and, therefore, the K-Factor given is nominal. Nominal U.S. K-Factors are provided in accordance with the 1999 edition of NFPA 13, Section 3-2.3. Refer to the specific data page for appropriate K-Factor information.

Available Styles:

Viking sprinklers are available for installation in several positions as indicated by a stamping on the deflector. The deflector style dictates the appropriate installation position of the sprinkler; it breaks the solid stream of water issuing from the sprinkler orifice to form a specific spray pattern. The following list indicates the various styles and identification of Viking sprinklers.

UPRIGHT SPRINKLER: A sprinkler intended to be installed with the deflector above the frame so water flows upward through the orifice, striking the deflector and forming an umbrella-shaped spray pattern downward. Marked “SSU” (Standard Sprinkler Upright) or “UPRIGHT” on the deflector.

PENDENT SPRINKLER: A sprinkler intended to be oriented with the deflector below the frame so water flows downward through the orifice, striking the deflector and forming an umbrella-shaped spray pattern downward. Marked “SSP” (Standard Sprinkler Pendent) or “PENDENT” on the deflector.

Viking Technical Data may be found on The Viking Corporation’s Web site at http://www.vikinggroupinc.com. The Web site may include a more recent edition of this Technical Data Page.

CONVENTIONAL SPRINKLER: An “old style” sprinkler intended to be installed with the deflector in either the upright or pendent position. The deflector provides a spherical type pattern with 40 to 60 percent of the water initially directed downward and a proportion directed upward. Must be installed in accordance with installation rules for conventional or old style sprinklers. DO NOT USE AS A REPLACEMENT FOR STANDARD SPRAY SPRINKLERS. Marked “C U/P” (Conventional Upright/Pendent) on the deflector.

The Viking Corporation, 210 N Industrial Park Drive, Hastings MI 49058
Telephone: 269-945-9501 Technical Services: 877-384-5464 Fax: 269-818-1680 Email: techsvcs@vikingcorp.com

VERTICAL SIDEWALL (VSW) SPRINKLER: A sprinkler intended for installation near the wall and ceiling. The deflector provides a water spray pattern outward in a quarter-spherical pattern and can be installed in the upright or pendent position with the flow arrow in the direction of discharge. Marked “SIDEWALL” on the deflector with an arrow and the word “FLOW”. (Note: Some vertical sidewall sprinklers can only be installed in the upright or pendent position—in this case, the sprinkler will also be marked “UPRIGHT” or “PENDENT”.)

HORIZONTAL SIDEWALL (HSW) SPRINKLER: A sprinkler intended for installation near the wall and ceiling. The special deflector provides a water spray pattern outward in a quarter-spherical pattern. Most of the water is directed away from the nearby wall with a small portion directed at the wall behind the sprinkler. The top of the deflector is oriented parallel with the ceiling or roof. The flow arrows point in the direction of discharge. Marked “SIDEWALL” and “TOP” with an arrow and the word “FLOW”.

EXTENDED COVERAGE (EC) SPRINKLER: A spray sprinkler designed to discharge water over an area having the maximum dimensions indicated in the individual listings. Maximum area of coverage, minimum flow rate, orifice size, and nominal K-Factor are specified in the individual listings. EC sprinklers are intended for Light-Hazard occupancies with smooth, flat, horizontal ceilings unless otherwise specified. In addition to the above markings, the sprinkler is marked “EC”.

QUICK RESPONSE (QR) SPRINKLER: A spray sprinkler with a fast- actuating operating element. The use of quick response sprinklers may be limited due to occupancy and hazard. Refer to the Authority Having Jurisdiction (AHJ) prior to installing.

QUICK RESPONSE EXTENDED COVERAGE (QREC) SPRINKLER: A spray sprinkler designed to discharge water over an area having the maximum dimensions indicated in the individual listing. This is a sprinkler with an operating element that meets the criteria for quick response. QREC sprinklers are only intended for Light Hazard occupancies. The sprinkler is marked “QREC”.

FLUSH SPRINKLER: A decorative spray sprinkler intended for installation with a concealed piping system. The unit is mounted flush with the ceiling or wall, with the fusible link exposed. Upon actuation, the deflector extends beyond the ceiling or wall to distribute water discharge. The sprinkler is marked “SSP”, “PEND”, or “SIDEWALL” and “TOP”.

CONCEALED SPRINKLER: A decorative spray sprinkler intended for installation with a concealed piping system. The sprinkler is hidden from view by a cover plate installed flush with the ceiling or wall. During fire conditions, the cover plate detaches, and upon sprinkler actuation, the deflector extends beyond the ceiling or wall to distribute water discharge. The sprinkler is marked “SSP”, “PEND”, or “SIDEWALL” and “TOP”.

RECESSED SPRINKLER: A spray sprinkler assembly intended for installation with a concealed piping system. The assembly consists of a sprinkler installed in a decorative adjustable recessed escutcheon that minimizes the protrusion of the sprinkler beyond the ceiling or wall without adversely affecting the sprinkler distribution or sensitivity. Refer to the appropriate technical data page for allowable sprinkler models, temperature ratings, and occupancy classifications. DO NOT RECESS ANY SPRINKLER NOT LISTED FOR USE WITH THE ESCUTCHEON.

CORROSION-RESISTANT SPRINKLER: A special service sprinkler with non-corrosive protective coatings, or that is fabricated from non-corrosive material, for use in atmospheres that would normally corrode sprinklers.

DRY SPRINKLER: A special-service sprinkler intended for installation on dry pipe systems or wet pipe systems where the sprinkler is subject to freezing temperatures. The unit consists of a sprinkler permanently secured to an extension nipple with a sealed inlet end to prevent water from entering the nipple until the sprinkler operates. The unit MUST be installed in a tee fitting. Dry upright sprinklers are marked with the “B” dimension [distance from the face of the fitting (tee) to the top of the deflector]. Dry pendent and sidewall sprinklers are marked with the “A” dimension [the distance from the face of fitting (tee) to the finished surface of the ceiling or wall].

LARGE DROP SPRINKLER: A type of special application sprinkler used to provide fire control of specific high-challenge fire hazards. Large drop sprinklers are designed to produce an umbrella-shaped spray pattern downward with a higher percentage of “large” water droplets than standard spray sprinklers. The sprinkler has an extra-large orifice with a nominal K-Factor of 11.2. Marked “HIGH CHALLENGE” and “UPRIGHT”.

EARLY SUPPRESSION FAST-RESPONSE (ESFR) SPRINKLER: A sprinkler intended to provide fire suppression of specific high-challenge fire hazards through the use of a fast response fusible link, 14.0, 16.8, or 25.2 nominal K-Factor, and special deflector. ESFR sprinklers are designed to produce high-momentum water droplets in a hemispherical pattern below the deflector. This permits penetration of the fire plume and direct wetting of the burning fuel surface while cooling the atmosphere early in the development of a high-challenge fire. Marked “ESFR” and “UPRIGHT” or “PEND”.

INTERMEDIATE LEVEL/RACK STORAGE SPRINKLER: A standard spray sprinkler assembly designed to protect its operating element from the spray of sprinklers installed at higher elevations. The assembly consists of a standard or large orifice upright or pendent sprinkler with an integral upright or pendent water shield and guard assembly. Use only those sprinklers that have been tested and listed for use with the assembly. Refer to the technical data page for allowable sprinkler models.

RESIDENTIAL SPRINKLER: A sprinkler intended for use in the following occupancies: one- and two-family dwellings with the fire protection sprinkler system installed in accordance with NFPA 13D; residential occupancies up to four stories in height with the fire protection system installed in accordance with NFPA 13R; and where allowed by the Authority Having Jurisdiction in residential portions of any occupancy with the fire protection system installed in accordance with NFPA 13.

The Viking Corporation, 210 N Industrial Park Drive, Hastings MI 49058
Telephone: 269-945-9501 Technical Services: 877-384-5464 Fax: 269-818-1680 Email: techsvcs@vikingcorp.com

Residential sprinklers have a unique distribution pattern and utilize a “fast response” heat sensitive operating element. They enhance survivability in the room of fire origin and are designed to provide a life safety environment for a minimum of ten minutes. For this reason, residential sprinklers must not be used to replace standard sprinklers unless tested for and approved by the Authority Having Jurisdiction. In addition to standard markings, the unit is identified as “RESIDENTIAL SPRINKLER” or “RES”.

4. INSTALLATION

Refer to appropriate NFPA Installation Standards.

5. OPERATION

Refer to the appropriate sprinkler technical data page(s).

6. INSPECTIONS, TESTS AND MAINTENANCE

Refer to NFPA 25 for Inspection, Testing and Maintenance requirements.

7. AVAILABILITY

Viking sprinklers are available through a network of domestic and international distributors. See The Viking Corporation web site for the closest distributor or contact The Viking Corporation.

8. GUARANTEE

For details of warranty, refer to Viking’s current list price schedule or contact Viking directly.

IMPORTANT: Always refer to Bulletin Form No. F_091699 - Care and Handling of Sprinklers and the appropriate sprinkler general care, installation, and maintenance guide. Viking sprinklers are to be installed in accordance with the latest edition of Viking technical data, the appropriate standards of NFPA, FM Global, LPCB, APSAD, VdS or other similar organizations, and also with the provisions of governmental codes, ordinances, and standards, whenever applicable. The sprinkler technical data page may contain installation requirements specific for the sprinkler model selected. The use of certain types of sprinklers may be limited due to occupancy and hazard. Refer to the Authority Having Jurisdiction prior to installation.

BULLETIN

REGULATORY AND HEALTH WARNINGS

The Viking Corporation, 210 N Industrial Park Drive, Hastings MI 49058
Telephone: 269-945-9501 Technical Services: 877-384-5464 Fax: 269-818-1680 Email: techsvcs@vikingcorp.com
Visit the Viking website for the latest edition of this technical data page www.vikinggroupinc.com

1. DESCRIPTION

Regulatory and Health Warnings applying to materials used in the manufacture and construction of fire protection products are provided herin as they relate to legally mandated jurisdictional regions.

⚠ WARNING

STATE OF CALIFORNIA, USA

Installing or servicing fire protection products such as sprinklers, valves, piping etc. can expose you to chemicals including, but not limited to, lead, nickel, butadiene, titaninum dioxide, chromium, carbon black, and acrylonitrile which are known to the State of California to cause cancer or birth defects or other reproductive harm.

For more information, go to **www.P65Warnings.ca.gov**

2. WARRANTY TERMS AND CONDITIONS

For details of warranty, refer to Viking's current list price schedule at **www.vikinggroupinc.com** or contact Viking directly.