TECHNICAL DATA

ESFR PENDENT SPRINKLER VK503 (K16.8)

The Viking Corporation, 210 N Industrial Park Drive, Hastings MI 49058
Telephone: 269-945-9501 Technical Services: 877-384-5464 Fax: 269-818-1680 Email: techsvcs@vikingcorp.com
Visit the Viking website for the latest edition of this technical data page: www.vikinggroupinc.com

1. DESCRIPTION

Viking Early Suppression Fast Response (ESFR) Pendent Sprinkler VK503 is a fast response fusible element type sprinkler designed for early fire suppression. With a 16.8 (242 metric*) nominal K-Factor and special deflector, this sprinkler produces large, high-momentum water droplets in a hemispheric pattern below the deflector. This permits penetration of the fire plume and direct wetting of the burning fuel surface while cooling the atmosphere early in the development of a high-challenge fire.

Viking Sprinkler VK503 may be used in the protection of ordinary types of storage. However, it is primarily intended to protect the following types of storage, which tend to produce severe-challenge fires: palletized and solid pile storage and single, double, multiple row, and portable open rack storage (no open-top containers or solid shelves).

Viking ESFR Pendent Sprinkler VK503 provides protection of most common storage materials, including:

--Encapsulated or unencapsulated Class I, II, III, and IV commodities*.
--Cartoned and uncartoned unexpanded plastics*.
--Cartoned expanded plastics*.

*Refer the Approval Charts and Design Criteria on pages 3-5 for cULus Listing and FM Approval requirements that must be followed.

In addition, some storage arrangements of rolled paper, aerosols, and rubber tires may be protected by Viking ESFR Pendent Sprinkler VK503.

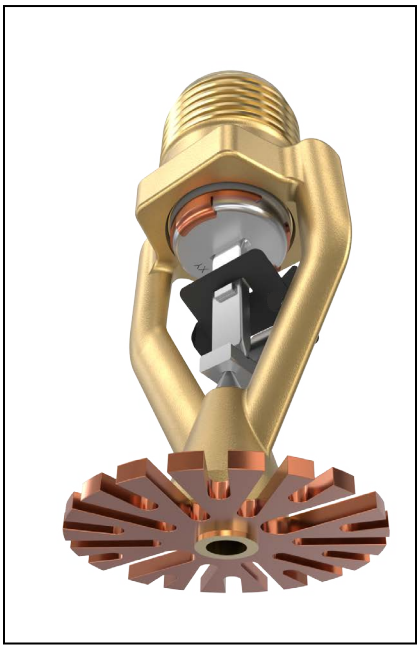

WARNING: Cancer and Reproductive Harm- www.P65Warnings.ca.gov

2. LISTINGS AND APPROVALS

cULus Listed: Category VNWH
Successfully meets UL 199 test standard and compliance program for ESFR sprinklers installed in-rack storage with high clearances to ceiling (20 ft or greater)

FM Approved: Class 2027

China Approval: Approved according to China GB Standard

CE CPR: EAD 100002-00-1106 March 2016, Declaration of Performance DOP_VK503.

Refer to Approval Charts and Design Criteria for requirements that must be followed.

TABLE 1
SPRINKLER GENERAL INFORMATION

Item	Description
Sprinkler Identification Number (SIN)	VK503
K-factor, gpm/psi^{½} (lpm/bar^{½})	16.8 (242)
Thread Size	3/4” NPT (20mm BSPT)
Sprinkler Orientation	Pendent
Maximum Working Pressure	175 psi (12 bar)

3. TECHNICAL DATA

Specifications:
Available since 2007.
Maximum Working Pressure: 175 psi (12 bar). Factory tested hydrostatically to 500 psi (34.5 bar).
Thread size: 3/4” NPT or 20 mm BSPT
Nominal K-Factor: 16.8 U.S. (242 metric*)
Overall Length: 2-7/8” (73 mm)
Deflector Diameter: 1-3/4” (44.5 mm)

Material Standards:
Frame Casting: Brass UNS-C84400 for part nos. 14073XX, 14073XX-TQ, 14818XX, 14818XX-TQ, 20372XX, and 20372XX-TQ. DZR brass for part nos. 27394XX and 27394XX-TQ.
Deflector: Phosphor Bronze UNS-C51000
Seat and Insert Assembly: Copper UNS-C11000 and Stainless Steel UNS-S30400
Belleville Spring Sealing Assembly: Nickel Alloy, coated on both sides with PTFE tape
Compression Screw: Stainless Steel UNS-S31603
Trigger and Support: Stainless Steel UNS-S31600
Fusible Element Assembly: Beryllium Nickel, coated with black or white epoxy, polyurethane, or acrylic paint.

VIKING®	TECHNICAL DATA	ESFR PENDENT SPRINKLER VK503 (K16.8)

The Viking Corporation, 210 N Industrial Park Drive, Hastings MI 49058
Telephone: 269-945-9501 Technical Services: 877-384-5464 Fax: 269-818-1680 Email: techsvcs@vikingcorp.com
Visit the Viking website for the latest edition of this technical data page: www.vikinggroupinc.com

NOTICE: DO NOT DISASSEMBLE SPRINKLER

Image not to scale.

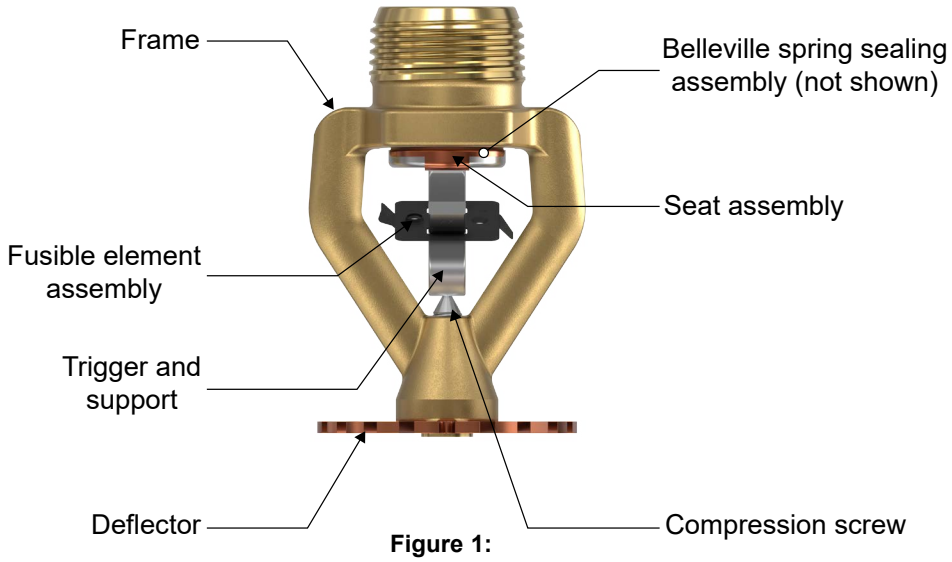

Figure 1:
Sprinkler Components (DZR Brass)

NOTICE: DO NOT DISASSEMBLE SPRINKLER

Image not to scale.

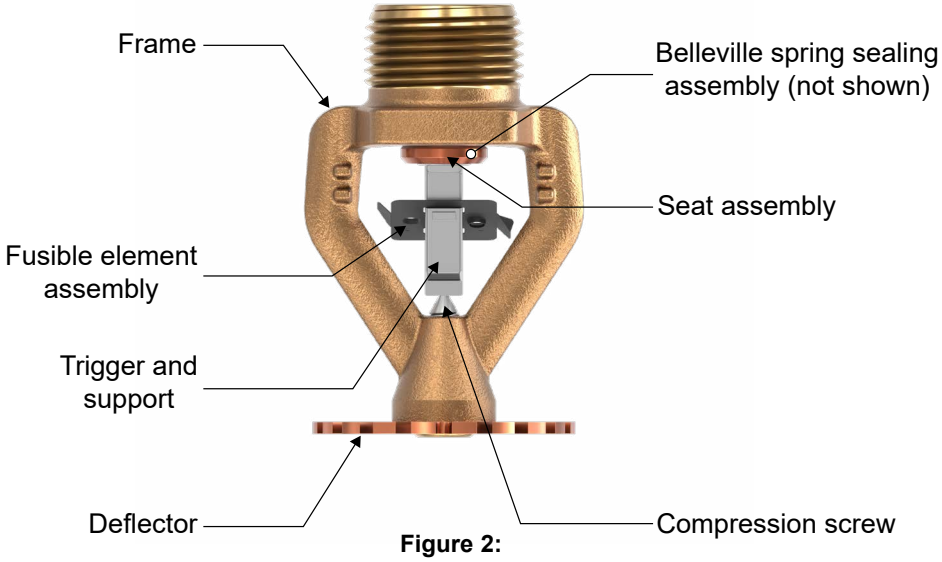

Figure 2:
Sprinkler Components (UNS-C84400)

VIKING®

TECHNICAL DATA

ESFR PENDENT SPRINKLER VK503 (K16.8)

The Viking Corporation, 210 N Industrial Park Drive, Hastings MI 49058
Telephone: 269-945-9501 Technical Services: 877-384-5464 Fax: 269-818-1680 Email: techsvcs@vikingcorp.com
Visit the Viking website for the latest edition of this technical data page: www.vikinggroupinc.com

Ordering Instructions

1. Choose a sprinkler base part number with the required thread size and listing or approval (refer to the approval chart).
2. Add the suffix for the desired finish.
3. Add the suffix for the desired temperature rating.

EXAMPLE: 27394AC = VK503 with brass finish and 165 °F (74 °C) nominal temperature rating. This sprinkler is to be installed into an area with a maximum ambient temperature of 100 °F (38 °C).

NOTE: *The "TQ" suffix for the part numbers below indicates a special protective cap (Figure 2-B) intended for use with InstaSeal® fittings. When ordering sprinklers with TQ suffixes in combination with InstaSeal® fittings, refer to Form No. F_021123 for installation instructions.*

FOR ESFR SPRINKLER GUARD AND WATER SHIELD INFORMATION, SEE DATASHEET F_061520.

Where "X" is shown in the base part numbers below, enter the desired suffixes for the finish and sprinkler temperature rating. EXAMPLE: 27394AE-TQ.

Sprinkler Base Part Number	
Part Number	**Thread Size**
27394AX	3/4" NPT
27394AX-TQ	3/4" NPT
Limited Availability	
14073AX	3/4" NPT
14073AX-TQ	3/4" NPT
14818AX	20 mm BSPT
14818AX-TQ	20 mm BSPT
20372AX	20 mm BSPT
20372AX-TQ	20 mm BSPT

Temperature Ratings			
Temperature Rating	**Fusible Element Paint Color**	**Maximum Ambient Ceiling Temperature**	**Suffix**
165 °F (74 °C)	Black	100 °F (38 °C)	C
205 °F (96 °C)[1]	White	150 °F (66 °C)	E

[1] The entire 205°F (96°C) fusible element is painted white.

Accessories (For Base Pt. No. 27394)
Sprinkler wrench: 26519M/B (use Side C)
Spinkler cabinet: 01725A
Accessories (For Base Pt. Nos. 14073, 14818, & 20372)
Sprinkler wrench: 13635W/B (use Side A)
Spinkler cabinet: 01725A

The Viking Corporation, 210 N Industrial Park Drive, Hastings MI 49058
Telephone: 269-945-9501 Technical Services: 877-384-5464 Fax: 269-818-1680 Email: techsvcs@vikingcorp.com
Visit the Viking website for the latest edition of this technical data page: www.vikinggroupinc.com

IMAGES FOR SPRINKLER 27394



Figure 3:
Torque Assist Cap and Sprinkler Wrench 26519M/B

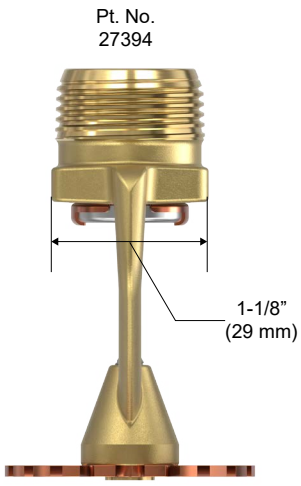

Figure 4:
Sprinkler Wrench Boss Dimensions

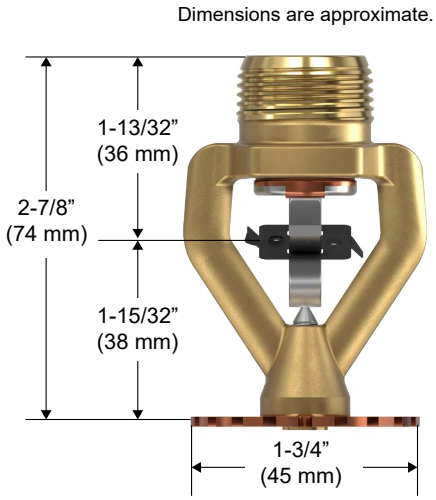

Figure 5:
Sprinkler Dimensions

The Viking Corporation, 210 N Industrial Park Drive, Hastings MI 49058
Telephone: 269-945-9501 Technical Services: 877-384-5464 Fax: 269-818-1680 Email: techsvcs@vikingcorp.com
Visit the Viking website for the latest edition of this technical data page: www.vikinggroupinc.com

IMAGES FOR SPRINKLER 14073, 14818, AND 23072)

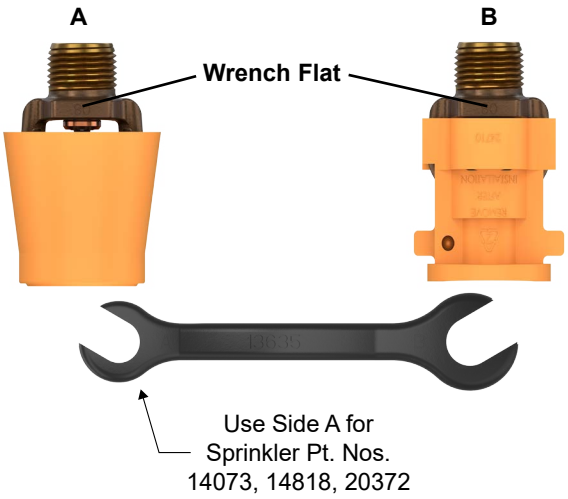

Figure 6:
Sprinkler Protective Caps and Wrench 13635W/B

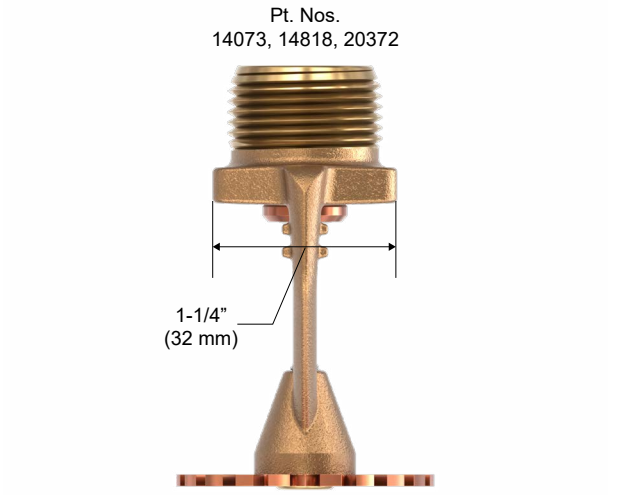

Figure 7:
Sprinkler Wrench Boss Dimensions

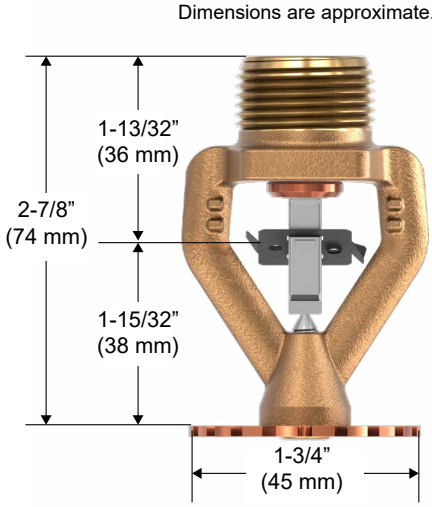

Figure 8:
Sprinkler Dimensions

The Viking Corporation, 210 N Industrial Park Drive, Hastings MI 49058
Telephone: 269-945-9501 Technical Services: 877-384-5464 Fax: 269-818-1680 Email: techsvcs@vikingcorp.com
Visit the Viking website for the latest edition of this technical data page: www.vikinggroupinc.com

4. INSTALLATION

⚠ WARNINGS

Viking sprinklers are manufactured and tested to meet rigid requirements of the approving agencies. The sprinklers are designed to be installed in accordance with recognized installation standards.

System design must be based on ESFR design guidelines described in the latest edition of NFPA Standards, the Authorities Having Jurisdiction, and also with the provisions of governmental codes, ordinances, and standards whenever applicable. Deviation from the standards or any alteration to the sprinkler after it leaves the factory including, but not limited to painting, plating, coating, or modification, may render the sprinkler inoperative and will automatically nullify the approval and any guarantee made by The Viking Corporation.

Installation by insufficiently qualified personnel poses the risk of fatal consequences.

- **This sprinkler must be installed properly by qualified personnel familiar with safe practices and applicable and recognized design and installation standards issued, for example, by NFPA, FM, VdS, or LPCB, and trained how to properly perform the installation procedures.**

A damaged or compromised sprinkler poses the risk of fatal consequences. Damaged or compromised sprinklers will not operate properly which could lead to loss of life.

- **NEVER use a sprinkler that has been exposed to temperatures exceeding the maximum allowed ambient temperature.**
- **NEVER use a sprinkler with a loss of liquid from the glass bulb or damage to the fusible element. A small bubble should be visible within the glass bulb; rotate the sprinkler to a horizontal position while observing the bulb to see the bubble.**
- **NEVER use a sprinkler that has been dropped or damaged.**
- **ALWAYS protect the sprinkler from mechanical damage during storage, transport, and handling.**
- **NEVER use sprinklers that have been painted by anyone other than the manufacturer.**
- **ALWAYS protect sprinklers from being painted during installation or replacement in accordance with the installation standards.**
- **NEVER clean sprinklers with anything other than 7 psi or lower compressed air.**
- **NEVER apply soap, water, ammonia, adhesives, solvents or any other fluids on sprinklers.**
- **Destroy every damaged or compromised sprinkler.**
- **ALWAYS provide adequate heat to wet pipe systems.**

NOTES:

- **Use ONLY the designated sprinkler wrench. DO NOT use any other type of wrench; doing so may damage the sprinkler.**
- **Install the sprinklers AFTER the piping is installed. Installing sprinklers on loose pipe can lead to damage.**
- **The sprinkler is designed to be installed while the protective cap is in place.**
- **DO NOT use the sprinkler deflector or fusible link to start or thread the sprinkler into a fitting.**
- **If the sprinkler will be installed into an InstaSeal® IS-W2 fitting, refer to Form No. F_021223.**

The Viking Corporation, 210 N Industrial Park Drive, Hastings MI 49058
Telephone: 269-945-9501 Technical Services: 877-384-5464 Fax: 269-818-1680 Email: techsvcs@vikingcorp.com
Visit the Viking website for the latest edition of this technical data page: www.vikinggroupinc.com

4.1 Installation Instructions

1. With the sprinkler contained in the plastic protective cap, apply a small amount of pipe-joint compound or tape to the male threads only, while taking care not to allow a build-up of compound in the sprinkler orifice.
2. With the sprinkler contained in the protective cap, install the sprinkler onto the piping by applying the sprinkler wrench to the sprinkler wrench flats.
3. Refer to section “4.2 After Sprinkler Installation”.

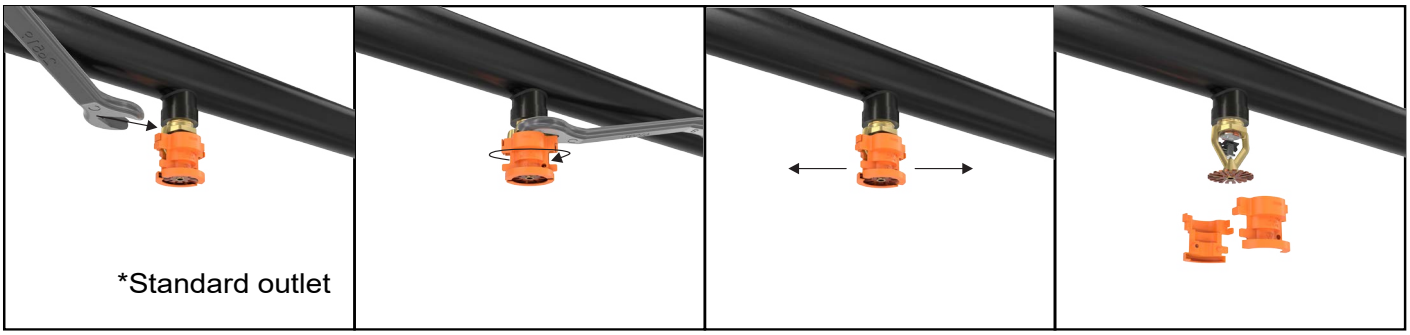

***Image is representative only.**

4.2 After Sprinkler Installation

1. After installation, the entire sprinkler system must be tested. The test must be conducted to comply with the Installation Standards. Make sure the sprinkler has been properly tightened. If a thread leak occurs, normally the unit must be removed, new pipe-joint compound or tape applied, and then reinstalled. This is due to the fact that when the joint seal is damaged, the sealing compound or tape is washed out of the joint. Immediately replace any damaged units, using the special sprinkler wrench only.

2. After installation and testing and repairing of all leaks, remove the protective caps from the sprinklers.

NOTICE: **When removing caps, use care to prevent dislodging or damaging sprinkler fusible element.**

- **Do NOT use any type of tool to remove the cap.**
- **Remove the cap by hand.**
- **THE CAPS MUST BE REMOVED FROM SPRINKLERS BEFORE PLACING THE SYSTEM IN SERVICE.**

5. OPERATION

During fire conditions, the heat-sensitive fusible element assembly disengages, releasing the seat and spring assemblies to open the waterway. Water flowing through the sprinkler orifice strikes the sprinkler deflector, forming a uniform spray pattern to suppress the fire.

The Viking Corporation, 210 N Industrial Park Drive, Hastings MI 49058
Telephone: 269-945-9501 Technical Services: 877-384-5464 Fax: 269-818-1680 Email: techsvcs@vikingcorp.com
Visit the Viking website for the latest edition of this technical data page: www.vikinggroupinc.com

6. INSPECTIONS, TESTS AND MAINTENANCE

NOTICE

The owner is responsible for maintaining the fire protection system and devices in proper operating condition. For minimum maintenance and inspection requirements, refer to the NFPA standard that describes care and maintenance of sprinkler systems. In addition, the Authorities Having Jurisdiction may have additional maintenance, testing, and inspection requirements that must be followed.

A. The sprinklers must be inspected on a regular basis for corrosion, mechanical damage, obstructions, paint, etc. The frequency of inspections may vary due to corrosive atmosphere, water supplies, and activity around the device.

B. Sprinklers that have been painted or mechanically damaged must be replaced immediately. Sprinklers showing signs of corrosion shall be tested and/or replaced immediately as required. Installation standards require sprinklers to be tested and, if necessary, replaced after a specified term of service. For Viking ESFR Pendent Sprinklers, refer to the Installation Standards (e.g., NFPA 25) and the Authorities Having Jurisdiction for the specified period of time after which testing and/or replacement is required. Sprinklers that have operated cannot be reassembled or reused, but must be replaced. When replacing sprinklers, use only new sprinklers.

C. The sprinkler discharge pattern is critical for proper fire protection. Therefore, nothing should be hung from, attached to, or otherwise obstruct the discharge pattern. All obstructions must be immediately removed or, if necessary, additional sprinklers installed.

D. When replacing existing sprinklers, the system must be removed from service. Refer to the appropriate system description and/or valve instructions. Prior to removing the system from service, notify all Authorities Having Jurisdiction. Consideration should be given to employment of a fire patrol in the affected area.
   1. Remove the system from service, drain all water, and relieve all pressure on the piping.
   2. Using the special sprinkler wrench, remove the old sprinkler and install the new unit. Care must be taken to ensure that the replacement sprinkler is the proper model and style, with the correct orifice size, temperature rating, and response characteristics. A fully stocked spare sprinkler cabinet should be provided for this purpose.
   3. Place the system back in service and secure all valves. Check the replaced sprinklers and repair all leaks.

E. Sprinkler systems that have been subject to a fire must be returned to service as soon as possible. The entire system must be inspected for damage and repaired or replaced as necessary. Sprinklers that have been exposed to corrosive products of combustion, but have not operated, should be replaced. Refer to the Authorities Having Jurisdiction for minimum replacement requirements.

7. AVAILABILITY

Viking ESFR K16.8 Pendent Sprinkler VK503 is available through a network of domestic and international distributors. See The Viking Corporation web site for the closest distributor or contact The Viking Corporation.

8. GUARANTEE

For details of warranty, refer to Viking's current list price schedule or contact Viking directly.

The Viking Corporation, 210 N Industrial Park Drive, Hastings MI 49058
Telephone: 269-945-9501 Technical Services: 877-384-5464 Fax: 269-818-1680 Email: techsvcs@vikingcorp.com
Visit the Viking website for the latest edition of this technical data page: www.vikinggroupinc.com

Approval Chart 1 (UL)

ESFR Pendent Sprinkler VK503
Maximum 175 PSI (12 bar) WWP

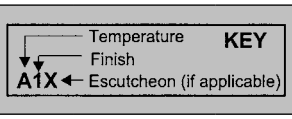

Base Part Number[1]	SIN	Thread Size		Nominal K-Factor		Overall Length		Listings and Approvals[3,4] (Refer also to Design Criteria.)		
		NPT Inches	BSPT mm	U.S.	metric	Inches	mm	cULus	China Approval	CE
27394XX[7]	VK503	3/4	--	16.8	242	2⅞	73	A1	--	A1
27394XX-TQ[7]		3/4	--					A1	--	A1
Limited Availability										
14073XX	VK503	3/4	--	16.8	242	2⅞	73	A1	--	A1
14818XX		--	20					A1	--	A1
20372XX[6]		--	20					A1	B1	A1
14073XX-TQ		3/4	--					A1	--	A1
14818XX-TQ		--	20					A1	--	A1
20372XX-TQ		--	20					A1	B1	A1

Approved Temperature Ratings
A - 165 °F (74 °C) and 205 °F (96 °C)
B - 165 °F (74 °C)

Approved Finish
1 - Brass

Footnotes

[1] Base part number shown. For complete part number, refer to the price list.
[2] Metric K-Factor measurement shown is when pressure is measured in bar. When pressure is measured in kPa, divide the metric K-Factor shown by 10.0.
[3] This chart shows listings and approvals available at the time of printing. Other approvals may be in process.
[4] Refer to the latest standards of NFPA 13.
[5] Listed by Underwriters Laboratories Inc. for use in the U.S. and Canada.
[6] Approved according to China GB Standard.
[7] This part number is for the VK503 with DZR material.

VIKING®	TECHNICAL DATA	ESFR PENDENT SPRINKLER VK503 (K16.8)

The Viking Corporation, 210 N Industrial Park Drive, Hastings MI 49058
Telephone: 269-945-9501 Technical Services: 877-384-5464 Fax: 269-818-1680 Email: techsvcs@vikingcorp.com
Visit the Viking website for the latest edition of this technical data page: www.vikinggroupinc.com

Approval Chart 2 (FM)

ESFR Pendent Sprinkler VK503
Maximum 175 PSI (12 bar) WWP

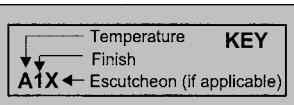

Base Part Number[1]	SIN	Thread Size		Nominal K-Factor		Overall Length		FM Approvals[3,4] (Refer also to Design Criteria.)	China Approval
		NPT Inches	BSPT mm	U.S.	metric[2]	Inches	mm		
27394XX[6]	VK503	3/4	--	16.8	242	2⅞	73	A1	--
27394XX-TQ[6]		3/4	--					A1	--
Limited Availability									
14073XX	VK503	3/4	--	16.8	242	2⅞	73	A1	--
14818XX		--	20					A1	--
20372XX[5]		--	20					B1	B1
14073XX-TQ		3/4	--					A1	--
14818XX-TQ		--	20					A1	--
20372XX-TQ		--	20					B1	B1

Approved Temperature Ratings
A - 165 °F (74 °C) and 205 °F (96 °C)
B - 165 °F (74 °C)

Approved Finish
1 - Brass

Footnotes

[1] Base part number shown. For complete part number, refer to the price list.

[2] Metric K-Factor measurement shown is when pressure is measured in bar. When pressure is measured in kPa, divide the metric K-Factor shown by 10.0.

[3] This chart shows the FM Approvals available at the time of printing. Other approvals may be in process.

[4] FM Approved as a quick response pendent **Storage** sprinkler. Refer to Design Criteria below.

[5] Approved according to China GB Standard.

[6] This part number is for the VK503 with DZR material.

The Viking Corporation, 210 N Industrial Park Drive, Hastings MI 49058
Telephone: 269-945-9501 Technical Services: 877-384-5464 Fax: 269-818-1680 Email: techsvcs@vikingcorp.com
Visit the Viking website for the latest edition of this technical data page: www.vikinggroupinc.com

TABLE 2
COMMODITY SELECTION AND DESIGN CRITERIA OVERVIEW FOR MODEL VK503 ESFR PENDENT SPRINKLERS

Storage Type	NFPA	FM
Sprinkler Type	ESFR	Storage*
Response Type	ESFR	QR
System Type	Wet Pipe system only	Wet Pipe system only
Temperature Rating(s) ºF (ºC)	165 ºF (74 ºC) and 205 ºF (96 ºC)	165 ºF (74 ºC) and 205 ºF (96 ºC)
Open Frame Single, Double, Multiple-Row, or Portable Rack Storage of Class I-IV and Group A or B Plastics	Refer to NFPA 13.	Refer to FM 2-0 and 8-9.
Solid Pile or Palletized Storage of Class I-IV and Group A or B Plastics	Refer to NFPA 13.	Refer to FM 2-0 and 8-9.
Idle Pallet Storage	Refer to NFPA 13.	Refer to FM 2-0, 8-9, and 8-24.
Rubber Tire Storage	Refer to NFPA 13.	Refer to FM 2-0 and 8-3.
Rolled Paper Storage (Refer to the standard.)	Refer to NFPA 13.	Refer to FM 8-21.
Flammable Liquid Storage (Refer to the standard.)	Refer to NFPA 30.	Refer to FM 7-29
Aerosol Storage (Refer to the standard.)	Refer to NFPA 30B	Refer to FM 7-31
Automotive Components in Portable Racks (Control mode only, refer to the standard.)	Refer to NFPA 13.	N/A

IMPORTANT: Always refer to Bulletin Form No. F_091699 - Care and Handling of Sprinklers. Viking ESFR Pendent Sprinklers are to be installed in accordance with the latest edition of Viking technical data, the latest standards of NFPA, FM Global, LPCB, and any other Authorities Having Jurisdiction, and also with provisions of governmental codes, ordinances, and standards whenever applicable.

***Approved storage sprinklers are also FM Approved for use as non-storage sprinklers.

The Viking Corporation, 210 N Industrial Park Drive, Hastings MI 49058
Telephone: 269-945-9501 Technical Services: 877-384-5464 Fax: 269-818-1680 Email: techsvcs@vikingcorp.com
Visit the Viking website for the latest edition of this technical data page: www.vikinggroupinc.com

TABLE 3:
COMMODITY SELECTION AND DESIGN CRITERIA OVERVIEW FOR MODEL VK503

Description	Specification, UL	Specification, FM
Sprinkler Type	ESFR	QR Storage***
Temperature Rating	165 ºF (74 ºC) and 205 ºF (96 ºC)	165 ºF (74 ºC) and 205 ºF (96 ºC)
Response Type	ESFR	QR
Sprinkler Position	Pendent, frame arms aligned with pipe, deflectors parallel with ceiling or roof	Pendent, frame arms aligned with pipe, deflectors parallel to floor.
System Type	Wet Pipe System only	Wet Pipe System only
Maximum Area of Coverage	100 ft^2 (9.3 m^2)	Refer to FM 2-0
Minimum Area of Coverage	64 ft^2 (5.9 m^2)	Refer to FM 2-0
Maximum Ceiling Slope	Refer to NFPA 13.	Refer to FM 2-0
Maximum Spacing	For buildings over 30 ft (9.1m) high, spacing between sprinklers and/or branch lines must be from 8 to 10 ft (2.4 to 3.1 m) For building heights up to 30 ft (9.1 m), the spacing allowed between sprinklers and/or branch lines is 8 to 12 ft (2.4 to 3.7 m), provided the area covered per sprinkler does not exceed the maximum 100 ft2 (9.3 m2) allowed.	Refer to FM 8-9
Minimum Spacing	8 ft. spacing (2.4 m)	Refer to FM 8-9
Deflector Distance from Walls	Minimum of 4 in. (102 mm) from walls but no more than 1/2 the allowable distance permitted between sprinklers	Refer to FM 2-0
Deflector to Top of Storage	Minimum of 36 in. (914 mm)	Refer to FM 2-0 and FM 8-9
Deflector** to Ceiling Distance	6–14 in. (152–356 mm)	Refer to FM 2-0
Maximum Ceiling Height	45 ft. (13.7 m)****	Refer to FM 8-9
Maximum Storage Height	40 ft. (12.2 m)	Refer to FM 8-9
Storage Arrangement**	Palletized, solid piled, open frame; single row, double row, or multiple row and portable rack arrangement	Refer to FM 8-9
Commodity	Refer to NFPA 13.	Refer to FM 8-1 and 8-9
Sprinkler System Design	Refer to NFPA 13.	Refer to FM 8-9
Obstruction Criteria	Refer to NFPA 13 Chapter 14.	Refer to FM 2-0
Minimum Aisle Width	Refer to NFPA 13.	Refer to FM 8-9
Hose Stream Allowance and Water Supply Duration	250 gpm (946 lpm) for 60 minutes or as determined by the approval	Refer to FM 8-9

* The maximum coverage area must not exceed 100 ft^2.

** For FM, the measurement is from the centerline of the thermal sensing element to the ceiling.

*** Approved storage sprinklers are also FM Approved for use as non-storage sprinklers.

**** For protecting rack storage of certain specified materials up to 40 ft (12.2 m) high in buildings with 45 ft (13.7 m) high ceilings with one row of in-rack sprinklers.

BULLETIN

CARE AND HANDLING OF SPRINKLERS

The Viking Corporation, 210 N Industrial Park Drive, Hastings MI 49058
Telephone: 269-945-9501 Technical Services: 877-384-5464 Fax: 269-818-1680 Email: techsvcs@vikingcorp.com

SPRINKLERS ARE FRAGILE - HANDLE WITH CARE!

General Handling and Storage:

- Store sprinklers in a cool, dry place.
- Protect sprinklers during storage, transport, handling, and after installation.
- Use the original shipping containers. DO NOT place sprinklers loose in boxes, bins, or buckets.
- Keep sprinklers separated at all times. DO NOT allow metal parts to contact sprinkler operating elements.

For Pre-Assembled Drops:

- Protect sprinklers during handling and after installation.
- For recessed assemblies, use the protective sprinkler cap (Viking Part Number 10364).

Sprinklers with Protective Shields or Caps:

- DO NOT remove shields or caps until after sprinkler installation and there no longer is potential for mechanical damage to the sprinkler operating elements.
- **Sprinkler shields or caps MUST be removed BEFORE placing the system in service!**
- Remove the sprinkler shield by carefully pulling it apart where it is snapped together.
- Remove the cap by turning it slightly and pulling it off the sprinkler.

Sprinkler Installation:

- DO NOT use the sprinkler deflector or operating element to start or thread the sprinkler into a fitting.
- **Use only the designated sprinkler head wrench!** Refer to the current sprinkler technical data page to determine the correct wrench for the model of sprinkler used.
- DO NOT install sprinklers onto piping at the floor level.
- Install sprinklers after the piping is in place to prevent mechanical damage.
- DO NOT allow impacts such as hammer blows directly to sprinklers or to fittings, pipe, or couplings in close proximity to sprinklers. Sprinklers can be damaged from direct or indirect impacts.
- DO NOT attempt to remove drywall, paint, etc., from sprinklers.
- **Take care not to over-tighten the sprinkler and/or damage its operating parts!**

  Maximum Torque:

  1/2" NPT: 14 ft-lbs. (19.0 N-m)

  3/4" NPT: 20 ft-lbs. (27.1 N-m)

  1" NPT: 30 ft-lbs. (40.7 N-m)



CORRECT
(Original container used)



INCORRECT
(Placed loose in box)

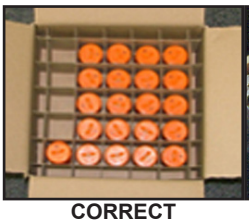

CORRECT
(Protected with caps)



INCORRECT
(Protective caps not used)

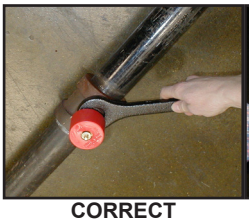

CORRECT
(Piping is in place at the ceiling)



INCORRECT
(Sprinkler at floor level)



CORRECT
(Special installation wrenches)



INCORRECT
(Designated wrench not used)

WARNING: Cancer and Reproductive Harm- www.P65Warnings.ca.gov

⚠ WARNING

Any sprinkler with a loss of liquid from the glass bulb or damage to the fusible element should be destroyed. Never install sprinklers that have been dropped, damaged, or exposed to temperatures exceeding the maximum ambient temperature allowed. Sprinklers that have been painted in the field must be replaced per NFPA 13. Protect sprinklers from paint and paint overspray in accordance with the installation standards. Do not clean sprinklers with soap and water, ammonia, or any other cleaning fluid. Do not use adhesives or solvents on sprinklers or their operating elements.

Refer to the appropriate technical data page and NFPA standards for complete care, handling, installation, and maintenance instructions. For additional product and system information Viking data pages and installation instructions are available on the Viking Web site at www.vikinggroupinc.com.

VIKING | BULLETIN | CARE AND HANDLING OF SPRINKLERS

The Viking Corporation, 210 N Industrial Park Drive, Hastings MI 49058
Telephone: 269-945-9501 Technical Services: 877-384-5464 Fax: 269-818-1680 Email: techsvcs@vikingcorp.com

PROTECTIVE SPRINKLER SHIELDS AND CAPS

General Handling and Storage:

Many Viking sprinklers are available with a plastic protective cap or shield temporarily covering the operating elements. The snap-on shields and caps are factory installed and are intended to help protect the operating elements from mechanical damage during shipping, storage, and installation. NOTE: It is still necessary to follow the care and handling instructions on the appropriate sprinkler technical data sheets* when installing sprinklers with bulb shields or caps.

WHEN TO REMOVE THE SHIELDS AND CAPS:

NOTE: SHIELDS AND CAPS MUST BE REMOVED FROM SPRINKLERS BEFORE PLACING THE SYSTEM IN SERVICE!

Remove the shield or cap from the sprinkler only after checking all of the following:

- The sprinkler has been installed*.
- The wall or ceiling finish work is completed where the sprinkler is installed and there no longer is a potential for mechanical damage to the sprinkler operating elements.

SHIELDS AND CAPS MUST BE REMOVED FROM SPRINKLERS BEFORE PLACING THE SYSTEM IN SERVICE!

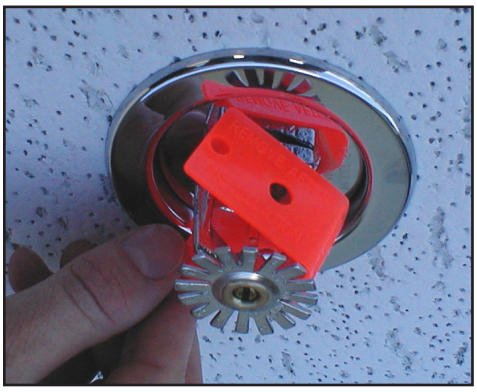

Figure 1: Sprinkler shield being removed from a pendent sprinkler.



Figure 2: Sprinkler cap being removed from a pendent sprinkler.

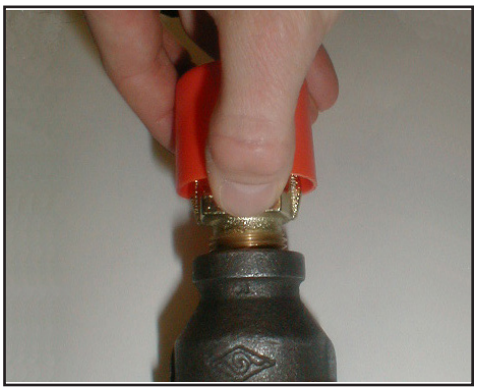

Figure 3: Sprinkler cap being removed from and upright sprinkler.

HOW TO REMOVE SHIELDS AND CAPS:

No tools are necessary to remove the shields or caps from sprinklers. DO NOT use any sharp objects to remove them! **Take care not to cause mechanical damage to sprinklers when removing the shields or caps.** When removing caps from fusible element sprinklers, use care to prevent dislodging ejector springs or damaging fusible elements. NOTE: Squeezing the sprinkler cap excessively could damage sprinkler fusible elements.

- To remove the shield, simply pull the ends of the shield apart where it is snapped together. Refer to Figure 1.
- To remove the cap, turn it slightly and pull it off the sprinkler. Refer to Figures 2 and 3.

NOTICE Refer to the current sprinkler technical data page to determine the correct sprinkler wrench for the model of sprinkler used.

⚠WARNING Never install sprinklers that have been dropped, damaged, or exposed to temperatures in excess of the maximum ambient temperature allowed.

*** Refer to the appropriate current technical data pages for complete care, handling, and installation instructions. Data pages are included with each shipment from Viking or Viking distributors. They can also be found on the Web site at www.vikinggroupinc.com.**

BULLETIN

CARE AND HANDLING OF SPRINKLERS

The Viking Corporation, 210 N Industrial Park Drive, Hastings MI 49058
Telephone: 269-945-9501 Technical Services: 877-384-5464 Fax: 269-818-1680 Email: techsvcs@vikingcorp.com

CAUTION CONCEALED COVER ASSEMBLIES ARE FRAGILE!
TO ASSURE SATISFACTORY PERFORMANCE OF THE PRODUCT, HANDLE WITH CARE.

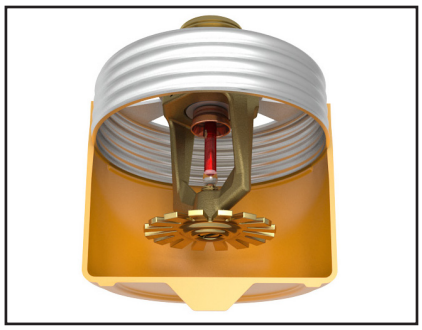

Concealed Sprinkler and Adapter Assembly with Protective Cap

Concealed Sprinkler and Adapter Assembly (Protective Cap Removed)



Cover Plate Assembly (Pendent Cover 12381 shown)



GENERAL HANDLING AND STORAGE INSTRUCTIONS:

- Do not store in temperatures exceeding 100 °F (38 °C). Avoid direct sunlight and confined areas subject to heat.
- Protect sprinklers and cover assemblies during storage, transport, handling, and after installation.
  -- Use original shipping containers.
  -- Do not place sprinklers or cover assemblies loose in boxes, bins, or buckets.
- Keep the sprinkler bodies covered with the protective sprinkler cap any time the sprinklers are shipped or handled, during testing of the system, and while ceiling finish work is being completed.
- Use only the designated Viking recessed sprinkler wrench (refer to the appropriate sprinkler data page) to install these sprinklers. **NOTE:** The protective cap is temporarily removed during installation and then placed back on the sprinkler for protection until finish work is completed.
- Do not over-tighten the sprinklers into fittings during installation.
- Do not use the sprinkler deflector to start or thread the sprinklers into fittings during installation.
- Do not attempt to remove drywall, paint, etc., from the sprinklers.
- Remove the plastic protective cap from the sprinkler before attaching the cover plate assembly. **PROTECTIVE CAPS MUST BE REMOVED FROM SPRINKLERS BEFORE PLACING THE SYSTEM IN SERVICE!**

Refer to the appropriate current technical data pages for complete care, handling, and installation instructions. Data pages are included with each shipment from Viking or Viking distributors. They can also be found on the Web site at www.vikinggroupinc.com.

VIKING

BULLETIN

CARE AND HANDLING OF SPRINKLERS

The Viking Corporation, 210 N Industrial Park Drive, Hastings MI 49058
Telephone: 269-945-9501 Technical Services: 877-384-5464 Fax: 269-818-1680 Email: techsvcs@vikingcorp.com

USE THE FOLLOWING PRECAUTIONS WHEN HANDLING WAX-COATED SPRINKLERS

Many of Viking's sprinklers are available with factory-applied wax coating for corrosion resistance. These sprinklers MUST receive appropriate care and handling to avoid damaging the wax coating and to assure satisfactory performance of the product.

General Handling and Storage of Wax-Coated Sprinklers:

- Store the sprinklers in a cool, dry place (in temperatures below the maximum ambient temperature allowed for the sprinkler temperature rating. Refer to Table 1 below.)
- Store containers of wax-coated sprinklers separate from other sprinklers.
- Protect the sprinklers during storage, transport, handling, and after installation.
- Use original shipping containers.
- Do not place sprinklers in loose boxes, bins, or buckets.

Installation of Wax-Coated Sprinklers:

Use only the special sprinkler head wrench designed for installing wax-coated Viking sprinklers (any other wrench may damage the unit).

- Take care not to crack the wax coating on the units.
- For touching up the wax coating after installation, wax is available from Viking in bar form. Refer to Table 1 below. The coating MUST be repaired after sprinkler installation to protect the corrosion-resistant properties of the sprinkler.
- Use care when locating sprinklers near fixtures that can generate heat. Do not install sprinklers where they would be exposed to temperatures exceeding the maximum recommended ambient temperature for the temperature rating used.
- Inspect the coated sprinklers frequently soon after installation to verify the integrity of the corrosion resistant coating. Thereafter, inspect representative samples of the coated sprinklers in accordance with NFPA 25. Close up visual inspections are necessary to determine whether the sprinklers are being affected by corrosive conditions.

TABLE 1

Sprinkler Temperature Rating (Fusing Point)	Wax Part Number	Wax Melting Point	Maximum Ambient Ceiling Temperature[1]	Wax Color
155 °F (68 °C) / 165 °F (74 °C)	02568A	148 °F (64 °C)	100 °F (38 °C)	Light Brown
175 °F (79 °C)	04146A	161 °F (71 °C)	150 °F (65 °C)	Brown
200 °F (93 °C)	04146A	161 °F (71 °C)	150 °F (65 °C)	Brown
220 °F (104 °C)	02569A	170 °F (76 °C)	150 °F (65 °C)	Dark Brown
286 °F (141 °C)	02569A	170 °F (76 °C)	150 °F (65 °C)	Dark Brown

[1] Based on NFPA-13. Other limits may apply, depending on fire loading, sprinkler location, and other requirements of the Authority Having Jurisdiction. Refer to specific installation standards.

⚠WARNING Never install sprinklers that have been dropped, damaged, or exposed to temperatures in excess of the maximum ambient temperature allowed.

Refer to the appropriate current technical data pages for complete care, handling, and installation instructions. Data pages are included with each shipment from Viking or Viking distributors. They can also be found on the Web site at www.vikinggroupinc.com.

TECHNICAL DATA — SPRINKLER OVERVIEW

The Viking Corporation, 210 N Industrial Park Drive, Hastings MI 49058
Telephone: 269-945-9501 Technical Services: 877-384-5464 Fax: 269-818-1680 Email: techsvcs@vikingcorp.com

1. DESCRIPTION

Viking fire sprinklers consist of a threaded frame with a specific waterway or orifice size and a deflector for distributing water in a specified pattern. A closed or sealed sprinkler refers to a complete assembly, including the thermosensitive operating element. An open sprinkler does not use an operating element and is open at all times. The distribution of water is intended to extinguish a fire or to control its spread.

Viking sprinklers are available in several models and styles. Refer to specific sprinkler technical data pages for available styles, finishes, temperature ratings, thread sizes, and nominal K-Factors for the particular model selected.

2. LISTINGS AND APPROVALS

Refer to the Approval Charts on the appropriate sprinkler technical data page(s) and/or approval agency listings.

WARNING: Cancer and Reproductive Harm- www.P65Warnings.ca.gov

3. TECHNICAL DATA

Pressure Ratings:

Maximum allowable water working pressure is 175 psig (12 Bar) unless rated and specified for high water working pressure [250 psig (17.2 bar)].

Sprinkler Identification:

Viking sprinklers are identified and marked with the word “Viking”, the sprinkler identification number (SIN) consisting of “VK” plus a three digit number*, the model letter, and the year of manufacture.

Available Finishes:

Viking sprinklers are available in several decorative finishes. Some models are available with corrosion-resistant coatings or are fabricated from non-corrosive material. Refer to the sprinkler technical data page for additional information.

Available Temperature Ratings:

Viking sprinklers are available in several temperature ratings that relate to a specific temperature classification. Applicable installation rules mandate the use and limitations of each temperature classification. In selecting the appropriate temperature classification, the maximum expected ceiling temperature must be known. When there is doubt as to the maximum temperature at the sprinkler location, a maximum-reading thermometer should be used to determine the temperature under conditions that would show the highest readings to be expected. In addition, recognized installation rules may require a higher temperature classification, depending upon sprinkler location, occupancy classification, commodity classification, storage height, and other hazards. In all cases, the maximum expected ceiling temperature dictates the lowest allowable temperature classification. Sprinklers located immediately adjacent to a heat source may require a higher temperature rating.

K-Factors:

Viking sprinklers are available in several orifice sizes with related K-Factors. The orifice is a tapered waterway and, therefore, the K-Factor given is nominal. Nominal U.S. K-Factors are provided in accordance with the 1999 edition of NFPA 13, Section 3-2.3. Refer to the specific data page for appropriate K-Factor information.

Available Styles:

Viking sprinklers are available for installation in several positions as indicated by a stamping on the deflector. The deflector style dictates the appropriate installation position of the sprinkler; it breaks the solid stream of water issuing from the sprinkler orifice to form a specific spray pattern. The following list indicates the various styles and identification of Viking sprinklers.

UPRIGHT SPRINKLER: A sprinkler intended to be installed with the deflector above the frame so water flows upward through the orifice, striking the deflector and forming an umbrella-shaped spray pattern downward. Marked “SSU” (Standard Sprinkler Upright) or “UPRIGHT” on the deflector.

PENDENT SPRINKLER: A sprinkler intended to be oriented with the deflector below the frame so water flows downward through the orifice, striking the deflector and forming an umbrella-shaped spray pattern downward. Marked “SSP” (Standard Sprinkler Pendent) or “PENDENT” on the deflector.

Viking Technical Data may be found on The Viking Corporation’s Web site at http://www.vikinggroupinc.com. The Web site may include a more recent edition of this Technical Data Page.

CONVENTIONAL SPRINKLER: An “old style” sprinkler intended to be installed with the deflector in either the upright or pendent position. The deflector provides a spherical type pattern with 40 to 60 percent of the water initially directed downward and a proportion directed upward. Must be installed in accordance with installation rules for conventional or old style sprinklers. DO NOT USE AS A REPLACEMENT FOR STANDARD SPRAY SPRINKLERS. Marked “C U/P” (Conventional Upright/Pendent) on the deflector.

The Viking Corporation, 210 N Industrial Park Drive, Hastings MI 49058
Telephone: 269-945-9501 Technical Services: 877-384-5464 Fax: 269-818-1680 Email: techsvcs@vikingcorp.com

VERTICAL SIDEWALL (VSW) SPRINKLER: A sprinkler intended for installation near the wall and ceiling. The deflector provides a water spray pattern outward in a quarter-spherical pattern and can be installed in the upright or pendent position with the flow arrow in the direction of discharge. Marked “SIDEWALL” on the deflector with an arrow and the word “FLOW”. (Note: Some vertical sidewall sprinklers can only be installed in the upright or pendent position—in this case, the sprinkler will also be marked “UPRIGHT” or “PENDENT”.)

HORIZONTAL SIDEWALL (HSW) SPRINKLER: A sprinkler intended for installation near the wall and ceiling. The special deflector provides a water spray pattern outward in a quarter-spherical pattern. Most of the water is directed away from the nearby wall with a small portion directed at the wall behind the sprinkler. The top of the deflector is oriented parallel with the ceiling or roof. The flow arrows point in the direction of discharge. Marked “SIDEWALL” and “TOP” with an arrow and the word “FLOW”.

EXTENDED COVERAGE (EC) SPRINKLER: A spray sprinkler designed to discharge water over an area having the maximum dimensions indicated in the individual listings. Maximum area of coverage, minimum flow rate, orifice size, and nominal K-Factor are specified in the individual listings. EC sprinklers are intended for Light-Hazard occupancies with smooth, flat, horizontal ceilings unless otherwise specified. In addition to the above markings, the sprinkler is marked “EC”.

QUICK RESPONSE (QR) SPRINKLER: A spray sprinkler with a fast- actuating operating element. The use of quick response sprinklers may be limited due to occupancy and hazard. Refer to the Authority Having Jurisdiction (AHJ) prior to installing.

QUICK RESPONSE EXTENDED COVERAGE (QREC) SPRINKLER: A spray sprinkler designed to discharge water over an area having the maximum dimensions indicated in the individual listing. This is a sprinkler with an operating element that meets the criteria for quick response. QREC sprinklers are only intended for Light Hazard occupancies. The sprinkler is marked “QREC”.

FLUSH SPRINKLER: A decorative spray sprinkler intended for installation with a concealed piping system. The unit is mounted flush with the ceiling or wall, with the fusible link exposed. Upon actuation, the deflector extends beyond the ceiling or wall to distribute water discharge. The sprinkler is marked “SSP”, “PEND”, or “SIDEWALL” and “TOP”.

CONCEALED SPRINKLER: A decorative spray sprinkler intended for installation with a concealed piping system. The sprinkler is hidden from view by a cover plate installed flush with the ceiling or wall. During fire conditions, the cover plate detaches, and upon sprinkler actuation, the deflector extends beyond the ceiling or wall to distribute water discharge. The sprinkler is marked “SSP”, “PEND”, or “SIDEWALL” and “TOP”.

RECESSED SPRINKLER: A spray sprinkler assembly intended for installation with a concealed piping system. The assembly consists of a sprinkler installed in a decorative adjustable recessed escutcheon that minimizes the protrusion of the sprinkler beyond the ceiling or wall without adversely affecting the sprinkler distribution or sensitivity. Refer to the appropriate technical data page for allowable sprinkler models, temperature ratings, and occupancy classifications. DO NOT RECESS ANY SPRINKLER NOT LISTED FOR USE WITH THE ESCUTCHEON.

CORROSION-RESISTANT SPRINKLER: A special service sprinkler with non-corrosive protective coatings, or that is fabricated from non-corrosive material, for use in atmospheres that would normally corrode sprinklers.

DRY SPRINKLER: A special-service sprinkler intended for installation on dry pipe systems or wet pipe systems where the sprinkler is subject to freezing temperatures. The unit consists of a sprinkler permanently secured to an extension nipple with a sealed inlet end to prevent water from entering the nipple until the sprinkler operates. The unit MUST be installed in a tee fitting. Dry upright sprinklers are marked with the “B” dimension [distance from the face of the fitting (tee) to the top of the deflector]. Dry pendent and sidewall sprinklers are marked with the “A” dimension [the distance from the face of fitting (tee) to the finished surface of the ceiling or wall].

LARGE DROP SPRINKLER: A type of special application sprinkler used to provide fire control of specific high-challenge fire hazards. Large drop sprinklers are designed to produce an umbrella-shaped spray pattern downward with a higher percentage of “large” water droplets than standard spray sprinklers. The sprinkler has an extra-large orifice with a nominal K-Factor of 11.2. Marked “HIGH CHALLENGE” and “UPRIGHT”.

EARLY SUPPRESSION FAST-RESPONSE (ESFR) SPRINKLER: A sprinkler intended to provide fire suppression of specific high-challenge fire hazards through the use of a fast response fusible link, 14.0, 16.8, or 25.2 nominal K-Factor, and special deflector. ESFR sprinklers are designed to produce high-momentum water droplets in a hemispherical pattern below the deflector. This permits penetration of the fire plume and direct wetting of the burning fuel surface while cooling the atmosphere early in the development of a high-challenge fire. Marked “ESFR” and “UPRIGHT” or “PEND”.

INTERMEDIATE LEVEL/RACK STORAGE SPRINKLER: A standard spray sprinkler assembly designed to protect its operating element from the spray of sprinklers installed at higher elevations. The assembly consists of a standard or large orifice upright or pendent sprinkler with an integral upright or pendent water shield and guard assembly. Use only those sprinklers that have been tested and listed for use with the assembly. Refer to the technical data page for allowable sprinkler models.

RESIDENTIAL SPRINKLER: A sprinkler intended for use in the following occupancies: one- and two-family dwellings with the fire protection sprinkler system installed in accordance with NFPA 13D; residential occupancies up to four stories in height with the fire protection system installed in accordance with NFPA 13R; and where allowed by the Authority Having Jurisdiction in residential portions of any occupancy with the fire protection system installed in accordance with NFPA 13.

The Viking Corporation, 210 N Industrial Park Drive, Hastings MI 49058
Telephone: 269-945-9501 Technical Services: 877-384-5464 Fax: 269-818-1680 Email: techsvcs@vikingcorp.com

Residential sprinklers have a unique distribution pattern and utilize a “fast response” heat sensitive operating element. They enhance survivability in the room of fire origin and are designed to provide a life safety environment for a minimum of ten minutes. For this reason, residential sprinklers must not be used to replace standard sprinklers unless tested for and approved by the Authority Having Jurisdiction. In addition to standard markings, the unit is identified as “RESIDENTIAL SPRINKLER” or “RES”.

4. INSTALLATION

Refer to appropriate NFPA Installation Standards.

5. OPERATION

Refer to the appropriate sprinkler technical data page(s).

6. INSPECTIONS, TESTS AND MAINTENANCE

Refer to NFPA 25 for Inspection, Testing and Maintenance requirements.

7. AVAILABILITY

Viking sprinklers are available through a network of domestic and international distributors. See The Viking Corporation web site for the closest distributor or contact The Viking Corporation.

8. GUARANTEE

For details of warranty, refer to Viking’s current list price schedule or contact Viking directly.

IMPORTANT: Always refer to Bulletin Form No. F_091699 - Care and Handling of Sprinklers and the appropriate sprinkler general care, installation, and maintenance guide. Viking sprinklers are to be installed in accordance with the latest edition of Viking technical data, the appropriate standards of NFPA, FM Global, LPCB, APSAD, VdS or other similar organizations, and also with the provisions of governmental codes, ordinances, and standards, whenever applicable. The sprinkler technical data page may contain installation requirements specific for the sprinkler model selected. The use of certain types of sprinklers may be limited due to occupancy and hazard. Refer to the Authority Having Jurisdiction prior to installation.

USE OF CORRECT INSTALLATION WRENCHES FOR ESFR SPRINKLERS

(VK500, VK503, VK510, VK514 AND VK520)

TECHNICAL DATA

The Viking Corporation, 210 N Industrial Park Drive, Hastings MI 49058
Telephone: 269-945-9501 Technical Services: 877-384-5464 Fax: 269-818-1680 Email: techsvcs@vikingcorp.com
Visit the Viking website for the latest edition of this technical data page.

CORRECT INSTALLATION WRENCHES FOR USE WITH VIKING ESFR SPRINKLERS

ESFR sprinklers must be installed using the manufacturer's special installation wrench only, while taking care not to over-tighten or damage the sprinkler operating parts. Figure 1 below shows an example of correct use of a designated ESFR sprinkler wrench. Use of any other wrench, such as those shown in Figures 2 through 4 below, could damage the unit.

- Viking ESFR Upright Sprinklers: Use Viking Wrench Part Number 05118CW/B.
- Viking ESFR Pendent K14 and K16.8 Sprinklers: Use Viking Wrench Part Number 10285W/B or double-ended 13635W/B (Side A).
- Viking ESFR Pendent K25.2 Sprinklers: Use Viking Wrench Part Number 12143W/B or double-ended 13635W/B (Side B).
- Viking ESFR Pendent K28 Sprinklers: Viking Wrench Part Number (double-ended) 13635W/B (Side B only).

The sprinkler is contained in a plastic cap for protection during shipping and installation. With the sprinkler contained in the plastic cap, apply a small amount of pipe-joint compound or tape to the male threads of the sprinkler and then install the ESFR sprinkler by applying the wrench to the sprinkler wrench flats only. DO NOT use the deflector or fusible element to start or thread the sprinkler into a fitting.

Take care not to over-tighten the sprinkler and/or damage its operating parts!

Maximum Torque: 3/4" NPT: 20 ft-lbs. (27.1 N-m) 1" NPT: 30 ft-lbs. (40.7 N-m)

DO NOT install sprinklers onto piping at the floor level. Install sprinklers after the piping is in place at the ceiling to prevent mechanical damage.



Figure 1: Correct use of designated installation wrench with ESFR Pendent K14 Sprinkler SIN VK500 and sprinkler cap

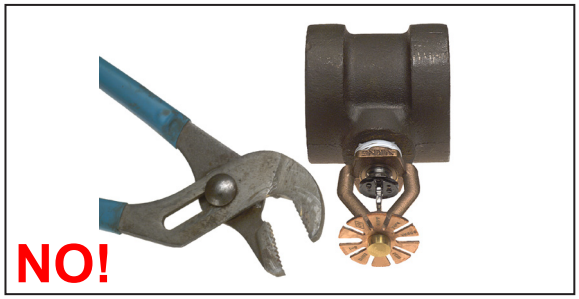

Figure 2: Incorrect installation wrench
(ESFR sprinkler shown with Channel Locks)

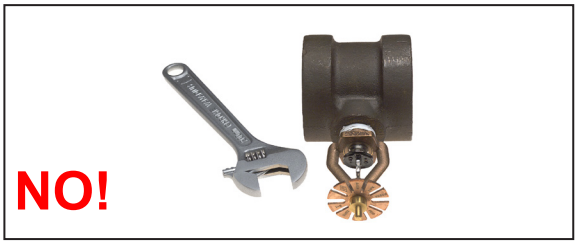

Figure 3: Incorrect installation wrench
(ESFR sprinkler shown with a crescent wrench)

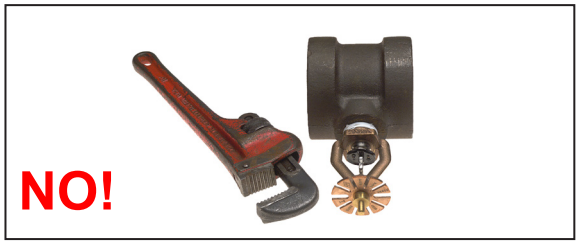

Figure 4: Incorrect installation wrench
(ESFR sprinkler shown with a pipe wrench)

WARNING: Cancer and Reproductive Harm-
www.P65Warnings.ca.gov

NOTE: The sprinklers are contained in plastic caps for protection during shipping and installation. Remove the caps from the sprinklers AFTER installation. Use care when removing the caps to prevent dislodging the ejector spring or damaging the fusible element. The caps MUST be removed from sprinklers BEFORE placing the system in service!

Refer to the latest appropriate technical data pages for complete care, handling, and installation instructions. Data pages are included with each shipment from Viking or Viking distributors. They can also be found on the Viking Web site at www.vkinggroupinc.com.

⚠ WARNING

Never install sprinklers that have been dropped, damaged, or exposed to temperatures in excess of the maximum ambient temperature allowed. Any sprinkler with damage to the operating element should be destroyed.

BULLETIN

REGULATORY AND HEALTH WARNINGS

The Viking Corporation, 210 N Industrial Park Drive, Hastings MI 49058
Telephone: 269-945-9501 Technical Services: 877-384-5464 Fax: 269-818-1680 Email: techsvcs@vikingcorp.com
Visit the Viking website for the latest edition of this technical data page www.vikinggroupinc.com

1. DESCRIPTION

Regulatory and Health Warnings applying to materials used in the manufacture and construction of fire protection products are provided herin as they relate to legally mandated jurisdictional regions.

⚠ WARNING

STATE OF CALIFORNIA, USA

Installing or servicing fire protection products such as sprinklers, valves, piping etc. can expose you to chemicals including, but not limited to, lead, nickel, butadiene, titaninum dioxide, chromium, carbon black, and acrylonitrile which are known to the State of California to cause cancer or birth defects or other reproductive harm.

For more information, go to **www.P65Warnings.ca.gov**

2. WARRANTY TERMS AND CONDITIONS

For details of warranty, refer to Viking's current list price schedule at **www.vikinggroupinc.com** or contact Viking directly.